commercial foodservice equipment

Banks

Unifrost

BLUE SEAL

SHARP

ATLAS

Pitco

prisma

Mazzoni

OMNIWASH

HOSHIZAKI

Panasonic

UNOX

www.cfequip.com

PRODUCT GUIDE 2018

www.cfequip.com

commercial foodservice equipment

COMMERCIAL REFRIGERATION

COOKING EQUIPMENT

WAREWASHING MACHINES

STAINLESS FABRICATION

PRODUCT GUIDE SPRING 2018

EQUIPMENT SOLUTIONS FOR PROFESSIONALS

NEXT DAY DELIVERY

FOODSERVICE EQUIPMENT

commercial foodservice equipment

WHO WE ARE

A very knowledgeable team of experts in all aspects of foodservice equipment. Giving value to catering equipment solutions. We endevour to build strong and long lasting business relationships.

OUR VALUES

Building trust, commitment and conviction is and integral part of our core. We strive to adhere to the highest ethical standards with our customers, staff and suppliers.

MISSION

Working in conjuction with (TPN) The Pallet Newort, An Post and local carriers our aim is to deliver goods on the next working day or in the case of very large machines two working days.

SUPPORT

Based in Ireland and with a modern distribution warehouse, we are able to provide a swift response to your needs. We hold substantial stocks of every item including spare parts and accessories. Experienced team of network technicians and friendly advisors.

QUALITY ASSURANCE

We have an active coordination strategy with producers, monitoring raw materials, making sure high quality components are used, regular testing is carried out, safety checks are enforced and up to date certification of all appliances is met. We never stop managing this process to give the best for every euro you spend.

CERTIFICATION

All of our products are certified for use in all EU countries and many other nations.

commercial foodservice equipment

CONTENTS SPRING 2018

REFRIGERATION EQUIPMENT

Accessories	109
Back Bar Coolers	48, 49, 50, 51, 52
Blast Chillers	27, 28, 29, 30
Bottle Coolers	34, 35, 36
Cake Display Fridges	32, 44, 45, 46, 47
Chest Freezers	31
Cold Drinks Display	34, 35, 36
Cold Toppers	33
Counter Fridges	14, 15, 16, 17, 19, 20, 21
Counter Freezer	18
Deli Counters	41, 42, 43
Display Fridges	32, 33, 34, 35, 36, 38, 39, 41, 42, 43, 44, 45, 46, 47
Frozen Display Cabinets	34, 35, 37
Glass Froster	34
Ice Makers	53, 54, 55, 56, 57
Meat Cabinets	7, 8, 10, 11, 12
Modular Ice Cubers	54, 55
Multidecks	38, 39
Patisserie Display	32, 44, 45, 46, 47
Parts	110
Pizza Prep Fridges	22, 23, 26
Salad Prep Fridges	22, 23, 24, 25, 26
Saladette Fridges	22, 23, 24, 25, 26
Sandwich Fridges	22, 23, 24, 25
Serveovers	41, 42, 43
Shock Freezers	27, 28, 29, 30
Spare Parts	110
Toppings Fridges	33
Undercounter Cabinets	4, 5, 34
Upright Freezers Stainless	6, 7, 9, 10, 11, 13
Upright Fridges Stainless	6, 7, 8, 10, 11, 12
Worktop Under Counter Freezers	4, 18, 34
Worktop Under Counter Fridges	14, 15, 17, 18, 19, 20, 21

CATERING EQUIPMENT

Accessories	109
6 Burner Gas Ranges	58, 60, 61
Bain Marie	73, 74
Banqueting Cart	75
Char Grills	70, 71
Combi Steamers Ovens	84, 85, 86, 87
Contact Grill	67
Convection Ovens	77, 78, 79, 82, 83
Cookers	58, 61
Crepe Grill	68
Deep Fat Fryers	59, 62, 63, 64, 65
Dough Mixers	90
Electric Fryer Freestanding	63
Extraction Hoods	107
Fly Killers	109
Food Mixers	91
Food Warmer	72, 73, 74, 75
Freestanding Fryers Gas	59, 64, 65
Fry Top Griddles	68, 69, 70, 71
Fryers (Table Top)	62
Gantries	74, 106
Gas Fryers	59, 64, 65
Gas Hobs	60
Gas Hoses	109
GN Containers	108
Griddles	68, 69, 70, 71
Kebab Grills	71
Hi Output Gas Fryers	65
Hot Cupboards	73, 75
Hot Display	66
Hot Lamps	66
Hot Water Boilers	92
Microwave Ovens	80, 81
Panini Grills	67
Pizza Ovens	76, 88, 89
Planetary Mixers	91
Pot Washers	93
Range Gas	58, 61
Salamander Grills	58, 60
Sinks	103
Shelving Sets	101
Snack Grills	60
Soup Kettle	72
Spare Parts	109
Stands	105
Tables	104, 105
Toaster Grill - Conveyor	66
Wall Shelves	106
Water Filters	109
Water Softeners	109
Water Boilers	92

WAREWASHING EQUIPMENT

Accessories	109
Dishwasher Stand	100
Dishwashers - Front Loading	96, 97
Dishwashers - Pass Through	98, 99
Glasswashers	94, 95
Pre-rinse Hose	100
Parts	110
Pot Washer	93
Utensil Washer	93
Water Softeners	109

FABRICATION, SINK, TAPS & CONTAINERS

Accessories	109
Bench Cabinet	104
Canopy Filters	107
Condense Canopy	107
Dishwasher Stand	100
Extraction Canopies	107
Equipment Stands	105
Janitorial Sinks	102
Gantries	74, 106
Gastronorm Pans	108
Microwave Shelf	81, 106
Mop Sinks	102
Pre Rinse Showers	100
Racking	101
Sinks And Undershelves	103
Stainless Tables	104, 105
Wall Shelves	106
Wash Hand Basins	102
Water Softeners	109
Work Tops	104, 105

Undercounter Stainless Refrigeration

Undercounter compact commercial units offering reliability and performance while maximising premium space available.

Unifrost commercial refrigeration

ONLY €499

ORDER TWO €469 EA

0°C to + 8°C

ADVANCED

R200SN

- ✓ Stainless exterior finish
- ✓ Digital display
- ✓ Even cooling
- ✓ Adjustable feet
- ✓ Door lock fitted
- ✓ Adjustable shelves

1 YEAR

ECO-FRIENDLY R600a HYDROCARBON

TECHNICAL SPECIFICATION

MODEL	R200SN Undercounter Chiller
PRICE	€499
DIMENSIONS	W600 x D595 x H850
CAPACITY	200 Lt
ENERGY CLASS	A (1.2Kw/24H)
SHIP WEIGHT	35Kg

ONLY €559

ORDER TWO €529 EA

-10°C to -22°C

F200SN

- ✓ Stainless exterior finish
- ✓ Digital display
- ✓ -10° to -22°C Temperature
- ✓ Manual defrost
- ✓ Reliable cabinet
- ✓ Door lock fitted

1 YEAR

ECO-FRIENDLY R600a HYDROCARBON

TECHNICAL SPECIFICATION

MODEL	F200SN Undercounter Freezer
PRICE	€559
DIMENSIONS	W600 x D595 x H850
CAPACITY	150 Lt
ENERGY CLASS	A (1.4Kw/24H)
SHIP WEIGHT	36Kg

Undercounter Stainless Refrigeration

Undercounter compact ventilated fridge offering reliability and performance while maximising premium space available.

R200SVN

ONLY €599

ORDER TWO €569 EA

FULLY VENTILATED
Undercounter Refrigerator

1 YEAR

ECO-FRIENDLY R600a HYDROCARBON

- ✓ Fully ventilated
- ✓ Ideal for busy locations
- ✓ Stainless exterior finish
- ✓ Dixell digital controller
- ✓ Even cooling
- ✓ Adjustable feet
- ✓ Door lock fitted
- ✓ Adjustable shelves
- ✓ Quick pulldown

TECHNICAL SPECIFICATION

MODEL	R200SVN Undercounter Chiller
PRICE	€599
DIMENSIONS	W600 x D595 x H850
CAPACITY	200 Litres
ENERGY CLASS	A
SHIP WEIGHT	38Kg

0°C to +8°C

Upright Stainless Fridge and Freezer

Excellent value, economic storage, designed for medium use, minimal maintenance, outstanding quality and reliability.

R400SN

Upright Refrigerator

FRIDGE €759

- ✓ Fan cooled interior
- ✓ Door lock & LED display
- ✓ Stainless exterior
- ✓ Reversible doors
- ✓ 4 shelves included 510 x 415
- ✓ Moulded hygienic interior
- ✓ Rear castors

1 YEAR

ECO-FRIENDLY R600a HYDROCARBON

F400SN

Upright Freezer

FREEZER €799

- ✓ Static freezer
- ✓ 7 Shelf positions
- ✓ Door lock & LED display
- ✓ Reversible door
- ✓ Stainless exterior
- ✓ Rear castors

REFRIGERATOR TECHNICAL SPECIFICATION

MODEL	R400SN
PRICE	€759
TEMPERATURE	2°C to +10°C
GROSS CAPACITY	361 Lt
DIMENSIONS	W600 x D600 x H1850
ENERGY CLASS	C (1.0Kw/24H)
SHIP WEIGHT	77Kg

FREEZER TECHNICAL SPECIFICATION

MODEL	F400SN
PRICE	€799
TEMPERATURE	-10°C to -25°C
GROSS CAPACITY	361 Lt
DIMENSIONS	W600 x D600 x H1850
ENERGY CLASS	B (2.45Kw/24H)
SHIP WEIGHT	83Kg

Slimline Stainless Fridge & Freezers

Gastro economy cabinets where space, efficiency and value for money come together. Top mount system for easy maintenance.

FRIDGE
€999

R450SV

Refrigerator

- ✓ Fully ventilated cooling
- ✓ Dixell digital controller
- ✓ Castors as standard
- ✓ Top mounted motor
- ✓ Shelf clips
- ✓ Safety Door Handle
- ✓ Quality compressor
- ✓ 3 x shelves included

2 YEAR

FREEZER
€1199

F450SV

Freezer

- ✓ Fully ventilated
- ✓ Dixell digital controller
- ✓ Fitted Castors
- ✓ Three shelves included
- ✓ Compact footprint

REFRIGERATOR TECHNICAL SPECIFICATION

MODEL	R450SV Refrigerator
PRICE	€999
TEMP RANGE	-1°C to +8°C
DIMENSIONS	W600 x D740x H1950
CAPACITY	440 Lt
ENERGY CLASS	F
SHIP WEIGHT	110Kg

FREEZER TECHNICAL SPECIFICATION

MODEL	F450SV Freezer
PRICE	€1199
TEMP RANGE	-17°C to -25°C
DIMENSIONS	W600 x D740x H1950
CAPACITY	440 Lt
ENERGY CLASS	F
SHIP WEIGHT	112Kg

Slimline Two Door Stainless Fridge

Gastro economy cabinets where space, efficiency and value come together.
Top mount system for easy routine maintenance.

Unifrost commercial refrigeration

ONLY
€1499

2 YEAR

R1000SV

Refrigerator

- ✓ Fully ventilated cooling
- ✓ Dixell digital controller
- ✓ Castors as standard
- ✓ Top mounted motor
- ✓ Quick pulldown
- ✓ Strong construction
- ✓ Quality compressor
- ✓ 6 x shelves included (525 X 530)
- ✓ Shelf clips

760mm doorway

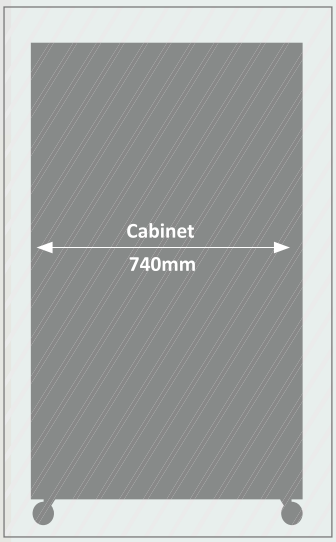

Standard door friendly fridge

TECHNICAL SPECIFICATION	
MODEL	R1000SV
PRICE	€1499
TEMPERATURE	-2°C to +8°C
GROSS CAPACITY	900 Lt
ENERGY CLASS	F
DIMENSIONS	W1200 X D740 X H1950
SHIP WEIGHT	155Kg

Slimline Two Door Stainless Freezer

Gastro economy cabinets where space, efficiency and value for money come together. Top mount system for easy routine maintenance.

F1000SV

Freezer

- ✓ **Fully ventilated cooling**
- ✓ **Dixell digital controller**
- ✓ **Castors as standard**
- ✓ **Top mounted motor**
- ✓ **Easy loading**
- ✓ **Strong construction**
- ✓ **Quality compressor**
- ✓ **6 x shelves included**

ONLY
€1649

760mm doorway

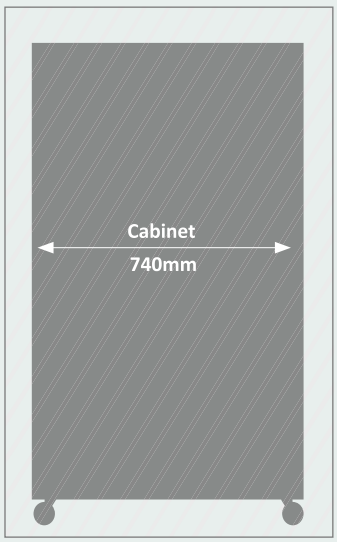

Standard door friendly freezer

TECHNICAL SPECIFICATION	
MODEL	F1000SV
PRICE	€1649
TEMPERATURE	-17°C to -25°C
GROSS CAPACITY	900 Lt
ENERGY CLASS	G
DIMENSIONS	W1200 X D740 X H1950
SHIP WEIGHT	165Kg

Large All Stainless GN 2/1 Fridge & Freezer

Gastronorm economy cabinets where high usage, efficiency and a price hard to beat come together. Top mount smart cooling system.

Unifrost commercial refrigeration

FRIDGE €1199

FREEZER €1399

NEW

R700SVN
Refrigerator

F700SVN
Freezer

R600a

R290

- ✓ Quality construction
- ✓ Dixell digital controller
- ✓ Fully automatic defrost
- ✓ Doors stay open at 90°
- ✓ 4 shelves and base shelf
- ✓ Castors as standard
- ✓ Push fit door seal
- ✓ Quality compressor
- ✓ Adjustable GN ⅔ shelves
- ✓ Fully ventilated interior
- ✓ Auto closing door, not reversible
- ✓ 10 GN ⅔ shelf capacity

ENERGY SAVINGS

2 YEAR

REFRIGERATOR

MODEL	R700SVN
PRICE	€1199
TEMPERATURE	-2°C TO +8°C
GROSS CAPACITY	670 LT
DIMENSIONS	W730 X D800 X H2130
ENERGY CLASS	B (1.26 KW/24H)
SHIP WEIGHT	140KG

FREEZER TECHNICAL SPECIFICATION

MODEL	F700SVN
PRICE	€1399
TEMPERATURE	-17°C to -22°C
GROSS CAPACITY	670 Lt
DIMENSIONS	W730 x D800 x H2130
ENERGY CLASS	C (4.9Kw/24H)
SHIP WEIGHT	142Kg

Stainless GN 2/1 Bottom Mount Fridge & Freezer

Gastronorm cabinets where high usage, efficiency and value come together.

R25BSV Refrigerator

F25BSV Freezer

FRIDGE €1149

FREEZER €1349

NEW

- ✓ Quality construction
- ✓ Dixell digital controller
- ✓ Fully automatic defrost
- ✓ Doors stay open at 90°
- ✓ 3 shelves as standard
- ✓ Castors as standard
- ✓ Push fit door seal
- ✓ Quality compressor
- ✓ Adjustable GN ⅔ shelves
- ✓ Fully ventilated interior
- ✓ Auto closing door
- ✓ 10 GN ⅔ shelf capacity
- ✓ Operational ambient 5° to 43°C

REFRIGERATOR TECHNICAL SPECIFICATION

MODEL	R25BSV
PRICE	€1149
TEMPERATURE	-2°C to +8°C
CAPACITY	600 Lt Gross
DIMENSIONS	W685 x D800 x H2120
ENERGY CLASS	B (2.01Kw/24H)
SHIP WEIGHT	140Kg

FREEZER TECHNICAL SPECIFICATION

MODEL	F25BSV
PRICE	€1349
TEMPERATURE	-17°C to -22°C
CAPACITY	600 Lt Gross
DIMENSIONS	W730 x D800 x H2120
ENERGY CLASS	C (4.9Kw/24H)
SHIP WEIGHT	147Kg

Stainless Double Door GN ⅔ Refrigerator

Economical and safe bulk food storage with built in energy efficiency and reliability. Built for busy working environment.

ONLY €1969

2 YEAR

ENERGY SAVINGS

ECO-FRIENDLY R600a HYDROCARBON

R1300SVN

- ✓ Dixell digital controller
- ✓ Quality compressor
- ✓ Doors stay open at 90°
- ✓ Ventilated interior
- ✓ Castors as standard
- ✓ Push fit door seal
- ✓ Quality construction
- ✓ Adjustable GN 2/1 shelves
- ✓ 8 Shelves standard
- ✓ Auto closing doors
- ✓ 20 shelf capacity
- ✓ Forced air cooling
- ✓ Fully auto defrost

NEW

TECHNICAL SPECIFICATION

MODEL	R1300SVN Refrigerator
PRICE	€1969
DIMENSIONS	W1314 x D800 x H2130
TEMPERATURE	-2°C to +8°C
CAPACITY	1300 Lt
ENERGY CLASS	B (1.26Kw/24H)
SHIP WEIGHT	200Kg

Stainless Double Door GN ⅔ Freezer

Economical and safe bulk food storage with built in energy efficiency and reliability. Built for busy working environment.

F1300SVN

ONLY €2169

2 YEAR

ENERGY SAVINGS

ECO-FRIENDLY R290 HYDROCARBON

- ✓ Dixell digital controller
- ✓ Quality compressor
- ✓ Doors stay open at 90°
- ✓ Ventilated interior
- ✓ Castors as standard
- ✓ Push fit door seal
- ✓ Quality construction
- ✓ Adjustable GN 2/1 shelves
- ✓ 8 Shelves standard
- ✓ Auto closing doors
- ✓ 20 shelf capacity
- ✓ Forced air cooling
- ✓ Fully auto defrost

NEW

TECHNICAL SPECIFICATION	
MODEL	F1300SVN Freezer
PRICE	€2169
DIMENSIONS	W1314 x D800 x H2130
TEMPERATURE	-17°C to -25°C
CAPACITY	1300 Lt
ENERGY CLASS	C (8.19Kw/24H)
SHIP WEIGHT	212Kg

Compact Counter Work Top Fridge

Space-saving cold storage with minimal footprint.

ADVANCED

RC900SN

Refrigerated Counter

ORDER ONE €679

ORDER TWO €649 EA

NEW

ENERGY SAVINGS

ECO-FRIENDLY R600a HYDROCARBON

1 YEAR

TECHNICAL SPECIFICATION	
MODEL	RC900SN
PRICE	€679
DIMENSIONS	W900xD700xH850
TEMPERATURE	-2°C to +8°C
CAPACITY	230 Lt
ENERGY CLASS	D (0.83Kw/24H)
SHIP WEIGHT	92Kg

- ✓ Hydro carbon system
- ✓ Stainless steel body
- ✓ Fan cooled interior
- ✓ Digital display
- ✓ Adjustable shelves
- ✓ Two doors GN
- ✓ 2 or 4 Drawer option
- ✓ 2 Drawers (RC2DK) €240

ONLY €919

RC-900SN 2D
2 Drawers
1 Door

ONLY €1159

RC-900SN 4D
4 Drawers

Value 3 Doors Flat Counter Refrigerator

Cost effective chilled general produce storage Gastronorm GN stainless hygienic interior.

RC1370SN

Refrigerated Counter

ORDER ONE €899

ORDER TWO €869 EA

ADVANCED

NEW

TECHNICAL SPECIFICATION	
MODEL	RC1370SN
PRICE	€899
DIMENSIONS	W1365 x D700 x H850
TEMPERATURE	+2°C to +8°C
CAPACITY	368 Lt
ENERGY CLASS	D (1.3Kw/24H)
SHIP WEIGHT	90Kg

- ✓ Low running costs
- ✓ Hydro carbon system
- ✓ Stainless steel body
- ✓ Fan cooled interior
- ✓ Dixel controller
- ✓ Adjustable shelves
- ✓ Three doors GN
- ✓ 2, 4 or 6 Drawer option
- ✓ 2 Drawers (RC2DK) €240

AVAILABLE APRIL 2018

ONLY €1139

RC1370SN-2D
2 Drawers
2 Doors

ONLY €1379

RC1370SN-4D
4 Drawers
1 Door

ONLY €1619

RC1370SN-6D
6 Drawers

Medium Duty Counter Work Top Fridge

Space-saving cold storage with minimal footprint and great value.

CR1200SV
Refrigerated Counter

ONLY €999

Optional splash back

ONLY €130

2 YEAR

NON GN

dixell

Digital controller

- ✓ **Chill 0°C to +8°C**
- ✓ **Space maximised refrigerator**
- ✓ **Operational ambient 5°C to +38°C**
- ✓ **Ventilated cooling**
- ✓ **Stainless construction**
- ✓ **Superior performance**
- ✓ **Versatile flat worktop**
- ✓ **Easy change door seals**
- ✓ **Castors standard**
- ✓ **Shelf clips**
- ✓ **Shelf size W390 x D530**
- ✓ **Splash back €130 Extra**

TECHNICAL SPECIFICATION	
MODEL	CR1200SV
PRICE	€999
DIMENSIONS	W1200 x D700 x H850
TEMPERATURE	0°C to +8°C
ENERGY CLASS	C (1.8Kw/24H)
CAPACITY	230 Lt
POWER	13 Amp plug

Professional Counter Worktop Fridge

Designed to maximise the workspace in your kitchen. Non GN interior.

CR1800SV

Refrigerator Counter

ONLY €1199

2 YEAR

NON GN

Optional splash back ONLY €160

- ✓ Space maximised refrigerator
- ✓ Operational ambient 5°C to +38°C
- ✓ Ventilated cooling
- ✓ Stainless construction
- ✓ Shelf clips
- ✓ Shelf size 490 x 530
- ✓ Easy change door seals
- ✓ Castors standard
- ✓ Splash back €160 Extra

dixell

Digital controller

TECHNICAL SPECIFICATION	
MODEL	CR1800SV
PRICE	€1199
DIMENSIONS	W1800 x D700 x H850
TEMPERATURE	0°C to +8°C
ENERGY CLASS	D (2.4Kw/24H)
CAPACITY	396 Lt
POWER	13 Amp plug

Professional Counter Freezer - Big Doors

Large doors to accommodate big containers of frozen produce.

Unifrost commercial refrigeration

CF1500SV

Freezer Counter

ONLY €1299

2 YEAR

dixell digital controller

- ✓ Prep-top freezer counter
- ✓ Ventilated cooling
- ✓ Stainless construction
- ✓ Superior performance
- ✓ Versatile flat worktop
- ✓ Easy change door seals
- ✓ Castors standard
- ✓ Shelf size 540 x 530
- ✓ Quality compressor

TECHNICAL SPECIFICATION

MODEL	CF1500SV
PRICE	€1299
TEMPERATURE	-17°C to -22°C
CAPACITY	280 Lt
DIMENSIONS	W1500 x D700 x H850
POWER	13 Amp plug

Worktop Counter Fridge - 2 Doors

Popular preparation worktop counter fridge has excellent performance and over 280 litres of refrigerated storage.

ADVANCED

CR-1365N

Refrigerated Counter

ONLY €1149

- ✓ Low running cost
- ✓ Fully auto defrost
- ✓ Quality construction
- ✓ Auto door closing
- ✓ Forced air cooling
- ✓ CFC free insulation
- ✓ Castors as standard
- ✓ Digital controller
- ✓ Splash back standard
- ✓ Holds GN 1/1 pans
- ✓ 2 x Adjustable shelves

Condenser Cover

Easy Access

TWO DRAWERS €1499

CR-1365N 2D

FOUR DRAWERS €1849

CR-1365N 4D

ENERGY SAVINGS

ECO-FRIENDLY R600a HYDROCARBON

2 YEAR

ONLY €350 PER UNIT

TECHNICAL SPECIFICATION	
MODEL	CR1365N
PRICE	€1149
TEMPERATURE	0°C to +8°C
GROSS CAPACITY	282 Lt
DIMENSIONS	W1360 x D700 x H850mm
ENERGY CLASS	B (1.983Kw/24H)
SHIP WEIGHT	98Kg

Options	
UGN1S Extra Shelf GN 1/1	€18
UGN1R Shelf Runner Guides	€18
U2DK Two Drawer Kit	€350
Door Gasket	€28

Worktop Counter Fridge - 3 Doors GN

Excellent preparation work top with 3 doors. High performance gastronorm refrigerated storage underneath.

ADVANCED

CR-1800N

Refrigerated Counter

ONLY €1349

ENERGY SAVINGS

- ✓ Low running cost
- ✓ Auto defrost
- ✓ Holds GN ⅓ pans
- ✓ Castors as standard
- ✓ Dixell digital controller
- ✓ Splash back standard
- ✓ 3 Adjustable shelves included

ECO-FRIENDLY R600a HYDROCARBON

2 YEAR

TWO DRAWERS €350

TECHNICAL SPECIFICATION

MODEL	CR1800N
PRICE	€1349
TEMPERATURE	0°C to +8°C
GROSS CAPACITY	417 Lt
DIMENSIONS	W1800 x D700 x H850mm
ENERGY CLASS	B (2.45Kw/24H)
SHIP WEIGHT	134Kg

Options

UGN1S Extra Shelf GN 1/1	€18
UGN1R Shelf Runner Guides	€18
U2DK Two Drawer Kit	€350
DG1800 2 Tier Gantry	€169
Door Gasket	€28

TWO DRAWERS €1699

CR-1800 2D
2 Drawers
2 Doors

FOUR DRAWERS €2049

CR-1800 4D
4 Drawers
1 Door

SIX DRAWERS €2399

CR-1800 6D
6 Drawers

Worktop Counter Fridge - 4 Doors

Extra long preparation worktop counter fridge has excellent performance and has over 600 litres of refrigerated storage.

CR-2230N

Refrigerated Counter

ONLY €1599

ENERGY SAVINGS

ECO-FRIENDLY R600a HYDROCARBON

2 YEAR

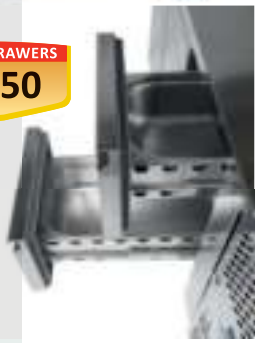

TWO DRAWERS €350

- ✓ Low running cost
- ✓ Fully auto defrost
- ✓ Auto door closing
- ✓ Castors as standard
- ✓ Digital controller
- ✓ Splash back standard
- ✓ 4 Adjustable shelves

TECHNICAL SPECIFICATION

MODEL	CR2230N
PRICE	€1599
TEMPERATURE	0°C to +8°C
GROSS CAPACITY	616 Lt
DIMENSIONS	W2230 x D700 x H850mm
ENERGY CLASS	C (3.962Kw/24H)
SHIP WEIGHT	134Kg

Options

UGN1S Extra Shelf GN 1/1	**€18**
UGN1R Shelf Runner Guides	**€18**
U2DK Two Drawer Kit	**€350**
Door Gasket	**€28**

TWO DRAWERS €1949

CR-2230N 2D
2 Drawers
3 Doors

FOUR DRAWERS €2299

CR-2230N 4D
4 Drawers
2 Doors

SIX DRAWERS €2649

CR-2230N 6D
6 Drawers
1 Door

EIGHT DRAWERS €2999

CR-2230N 8D
8 Drawers

Prep Counter Fridge

Good quality, no nonsense, refrigerated prep counters from Unifrost.
Simple, safe food storage and preparation at an unbeatable price.

SA900N

ORDER ONE
€769

2 YEAR

ECO-FRIENDLY R600a HYDROCARBON

GN 1/2	GN 1/4	GN 1/2
GN 1/2	GN 1/4	GN 1/2

SET 4 GN ½ + 2 GN ¼
6 PANS €37

- ✓ 2 Doors, GN ½ interior
- ✓ Top access lid and cutting board
- ✓ All stainless exterior (containers not included)
- ✓ Dixell digital controller
- ✓ Low running cost

TECHNICAL SPECIFICATION	
MODEL	SA900N Saladette Fridge
PRICE	€769
DIMENSIONS	W900 x D700 x H850
SHIP WEIGHT	92Kg

PCF900N

Compact Prep Station

Maximise cold storage with this versatile preparation counter.

ONLY
€769

2 YEAR

ECO-FRIENDLY R600a HYDROCARBON

- ✓ Granite top
- ✓ 2doors, GN ½ interior
- ✓ 5 GN 1/6 pans (not included)
- ✓ Dixell digital controller
- ✓ Fan cooled interior
- ✓ Low running cost

SET 5 GN ⅙
5 PANS €19

TECHNICAL SPECIFICATION	
MODEL	PCF900N Pizza Prep Fridge
PRICE	€769
DIMENSIONS	W900 x D700 x H850
SHIP WEIGHT	120Kg

Sandwich/Salad Prep Stations

Super efficient refrigerated preparation counters from Unifrost designed to compliment any professional foodservice environment.

PCF1365N

ONLY €1299

- ✓ Accepts 8 GN ¼ pans
- ✓ Digital controller
- ✓ 3 doors, GN ⅓ interior
- ✓ Low running cost
- ✓ GN containers not included
- ✓ 355mm (14") work top

ECO-FRIENDLY R600a HYDROCARBON

SET OF GN ¼ x 100
8 PANS €36

FRESH FOOD

2 YEAR

TECHNICAL SPECIFICATION	
MODEL	PCF1365N Prep Fridge
PRICE	€1299
DIMENSIONS	W1365 x D700 x H885 / 1015
TEMP	+2°C to +8°C (Understorage)
SHIP WEIGHT	155Kg

Pizza Prep Counters

These multi-functional units with independent refrigeration above are perfect for preparing everything from pizzas to salads, meats etc.

PT1400N

ONLY €1699

- ✓ Holds 6 x GN ¼ on top
- ✓ Granite work top
- ✓ Chiller toppings unit
- ✓ Fan cooled interior - 3 doors
- ✓ Dixell digital display
- ✓ Low running cost
- ✓ Pans set of 6 €27

GRANITE WORKTOP

SET OF 6 GN ¼ x 100
6 PANS €27

2 YEAR

ECO-FRIENDLY R600a HYDROCARBON

TECHNICAL SPECIFICATION	
MODEL	PT1400N Pizza Counter
PRICE	€1699
DIMENSIONS	W1400 x D700 x H1415
TEMP	+2°C to +8°C
ENERGY CLASS	C (3.152KW/24H) BASE
SHIP WEIGHT	270Kg

Prep & Sandwich Counter Fridge

These multi function units with direct refrigeration from above and below are perfect for preparing everything from salads to meat.

Unifrost commercial refrigeration

ONLY €1299

2 YEAR WARRANTY

FRESH FOOD

ENERGY SAVINGS

STV1225

- ✓ Pans directly cooled from above
- ✓ High quality stainless steel
- ✓ Spring loaded door
- ✓ Auto defrost system
- ✓ Adjustable shelves
- ✓ Slim fit, rear mounted compressor
- ✓ Uniform air distribution
- ✓ Recessed handles for added safety
- ✓ Swivel castors, 2 with brakes

Accepts GN 1/6 & 1/3 Pans

TECHNICAL SPECIFICATION

MODEL	STV1225 Saladette
PRICE	€1299
TEMP RANGE	+1°C to +8°C
REFRIGERANT	R134a
COMPRESSOR	1/3 HP
CONNECTION	Plug-in
FINISH	Stainless Steel
DIMENSIONS	W1225 x D762 x H1109
CAPACITY	340 Lt
SHIP WEIGHT	110 Kg

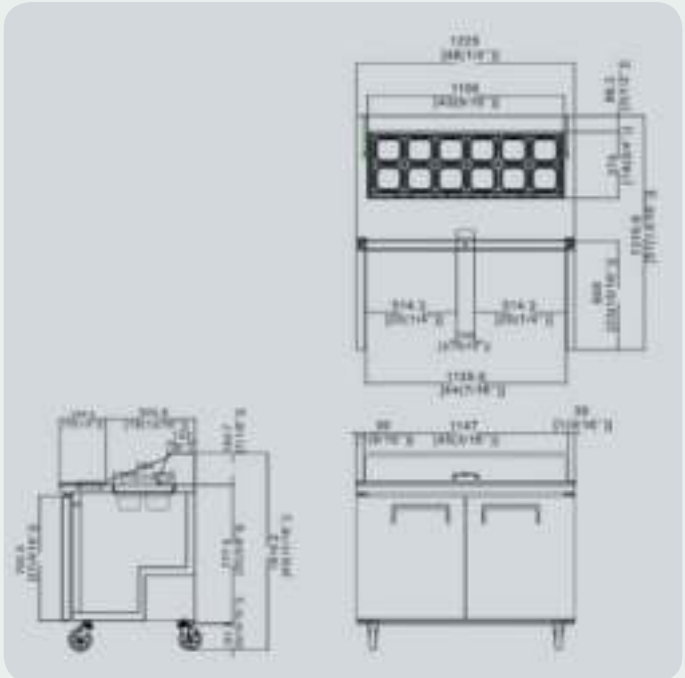

Preparation Mega Top Counter Fridge

Two zone for salads, cooked meats or sandwich prep chiller.

STV1530MT

ONLY
€1599

- ✓ Pans not included
- ✓ Pans directly cooled from above
- ✓ High quality stainless steel
- ✓ Spring loaded door
- ✓ Auto defrost system
- ✓ Adjustable shelves
- ✓ Slim fit, rear mounted compressor
- ✓ Uniform air distribution
- ✓ Recessed handles for added safety
- ✓ Swivel castors, 2 with brakes

2 YEAR

FRESH FOOD

ENERGY SAVINGS

4 GN WELL

TECHNICAL SPECIFICATION	
MODEL	STV1530MT
PRICE	€1599
TEMP RANGE	+1°C to +8°C
REFRIGERANT	R134a
CONNECTION	Plug-in
FINISH	Stainless Steel
DIMENSIONS	W1530 x D863 x H1183
CAPACITY	526 Lt
SHIP WEIGHT	136 Kg

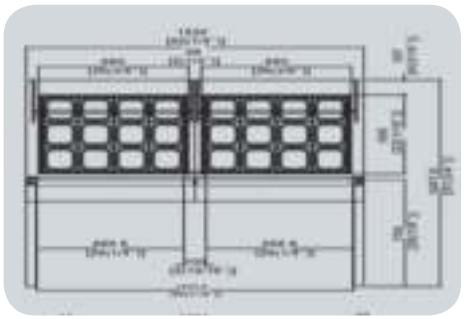

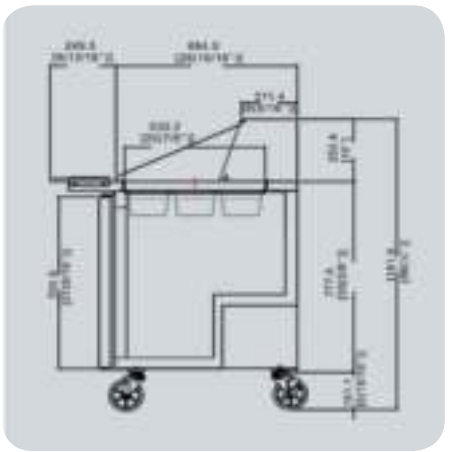

Refrigerated Pizza-Salad Prep Station

Stainless prep counter for pizza, salad & meats. Versatile, spacious counter with smart cooling top section.

PST1700

ONLY €1899

2 YEAR

ENERGY SAVINGS

- ✓ Huge work board 1697x490
- ✓ Massive under storage
- ✓ Digital display
- ✓ 9 x GN 1/3 pans not included
- ✓ Auto defrost
- ✓ High density insulation
- ✓ Insulated top lids
- ✓ Ventilated air cooling
- ✓ Quality stainless steel finish
- ✓ Swivel castors - heavy duty
- ✓ Dual zone top - meats or salad

TECHNICAL SPECIFICATION

MODEL	PST1700 Pizza Prep Fridge
PRICE	€1899
DIMENSIONS	W1700 x D820 x H1070
CAPACITY	566 Lt
TEMPERATURE	+1°C to +8°C
POWER	480 Watts (Plug-in)
WEIGHT	249Kg

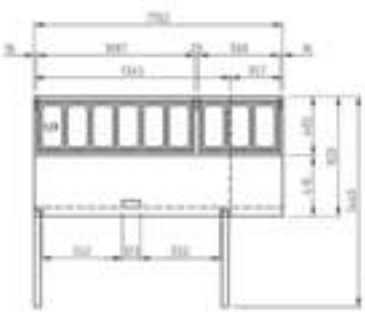

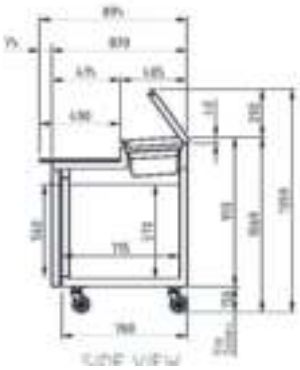

Compact Counter Top Blast Chiller

Rapid chilling for cooked products - ideal for small caterers and bakers.

BC3UN

ONLY
€1399

- ✓ Easy to operate
- ✓ Touch controls
- ✓ +70°C to 3°C (90 mins) 8Kg
- ✓ +70°C to -18°C (240 mins) 5Kg
- ✓ Stainless body
- ✓ Powerful EBM fan motors
- ✓ Takes ⅔ GN tray containers
- ✓ Food probe included
- ✓ Digital controller (dixel)
- ✓ Chill 8Kg in 90minutes*
- ✓ Interior: W355 X D370 X H270

*Portioned & Even Distribution

2 YEAR PARTS WARRANTY

ECO-FRIENDLY R290 HYDROCARBON

Bacteria Danger Zone
+5°C to +63°C

TRAYS CAPACITY
3 x (GN2/3)

TECHNICAL SPECIFICATION

MODEL	BC3UN Blast Chiller
PRICE	€1399
TRAY CAPACITY	3 x ⅔ GN
BLAST CHILL	8Kg in 90 mins
BLAST FREEZER	5Kg in 90 mins
CAPACITY	36Lt
DIMENSIONS	W660 x D650 x H417
POWER	13 Amp Plug
SHIP WEIGHT	52Kg

Blast Chillers / Shock Freezer

Rapid chilling and even faster freezing from these blast chillers and shock freezers. Ideal for caterers and bakers.

BC5UN

ONLY €2399

- ✓ Food probe included
- ✓ 4 touch programmes
- ✓ +70°C to 3°C (90 mins)
- ✓ +70°C to -18°C (240 mins)
- ✓ Powerful EBM fan motors
- ✓ Takes GN or 400 x 600 trays
- ✓ Counter top height 1015mm
- ✓ 18Kg in 90 minutes chill*
- ✓ 14Kg in 240 minutes freeze*
- ✓ Interior: W660 x D420 x H400
- ✓ All 304 stainless
- ✓ Reversible door

* Portioned & Even Distribution

TRAY CAPACITY
5 (GN⅓) OR 5 (400 x 600)

GASTRO AND BAKERY FRIENDLY

TECHNICAL SPECIFICATION

MODEL	BC5UN Blast Chiller
PRICE	€2399
TRAY CAPACITY	5(GN ⅓) or 5(400 x 600)
POWER	801 Watts (Plug-in)
DIMENSIONS	W800 x D815 x H1015
SHIP WEIGHT	72Kg

2 YEAR

ECO-FRIENDLY R290 HYDROCARBON

Useful Information

Blast chilling quickly lowers temperatures to a safe level to prevent bacterial growth. A safe level for food is below 5°C or over 63°C. The blast chilling cycle is designed to drop temperatures from +70°C to 3°C in 90 minutes. This method can also maintain texture, flavour and appearance. Preserve food when staff are available and reheat for service later. Shock freezing over long time periods forms micro-crystals in the water content of food and helps to keep the flavour, texture and colour, making food last longer in your freezer. The product should be portioned and spread evenly over all shelves to obtain weigh/time ratios.

Blast Chillers/ Shock Freezer

Rapid chilling and even faster freezing from these HACCP compliant blast chillers and shock freezers. Ideal for caterers and bakers.

ONLY €3299

2 YEAR

ECO-FRIENDLY R290 HYDROCARBON

GASTRO AND BAKERY FRIENDLY

BC10UN

- ✓ Easy to operate
- ✓ 4 touch programmes
- ✓ +70°C to 3°C (90 mins)
- ✓ +70°C to -18°C (240 mins)
- ✓ Powerful EBM fan motors
- ✓ Takes GN or 400 x 600 trays
- ✓ Easy to operate
- ✓ Food probe included
- ✓ Dixell digital controller
- ✓ Chills 40Kg in 90minutes*
- ✓ Freeze 30Kg in 240 mins*
- ✓ Interior: W660 x D420 x H870
- ✓ Reversible door

*Portioned & Even Distribution

TRAYS CAPACITY
10 (GN1/1) OR 10 (400 x 600)

TECHNICAL SPECIFICATION	
MODEL	BC10UN Blast Chiller
PRICE	€3299
TRAY CAPACITY	10(GN 1/1) or 10(400 x 600)
BLAST CHILL	40Kg in 90 mins
FREEZE	30Kg in 240 mins
DIMENSIONS	W800 x D815 x H1645
POWER	1400 Watts (Plug-in)
SHIP WEIGHT	187Kg

New controller / user friendly

Probe Sensor

Blast Chillers/ Shock Freezer

Rapid chilling and even faster freezing from these HACCP compliant blast chillers and shock freezers. Ideal for advanced preparation.

BC14U

2 YEAR

ONLY €4699

TRAYS CAPACITY
14 (GN1/1) OR 14 (400 x 600)

- ✓ Easy to operate
- ✓ Touch controls
- ✓ +70°C to 3°C (90 mins)
- ✓ +70°C to -18°C (240 mins)
- ✓ Powerful EBM fan motors
- ✓ Takes GN or 400 x 600 trays
- ✓ Food probe included
- ✓ Dixell digital controller
- ✓ Chill 55Kg in 90minutes*
- ✓ Freeze 38Kg in 240 mins*
- ✓ Interior: W660 X D420 X H 1150
- ✓ Reversible door

* Portioned & Even Distribution

TECHNICAL SPECIFICATION

MODEL	BC14U Blast Chiller
PRICE	€4699
TRAY CAPACITY	14(GN 1/1) or 14(400 x 600)
BLAST CHILL	55Kg in 90 mins
FREEZE	38Kg in 240 mins
DIMENSIONS	W800 X D815 X H2170
POWER	2.5Kw 3 Phase
SHIP WEIGHT	266Kg

GASTRO AND BAKERY FRIENDLY

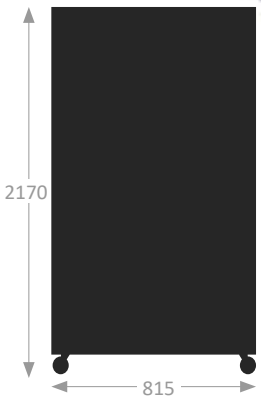

Professional Commercial Chest Freezer

Stainless lids are hygienic and long lasting, better suited to commercial kitchens.

CF400S

ONLY €639

- ✓ 13.8 cu.ft capacity
- ✓ Fast freezing
- ✓ Low running cost
- ✓ Long life compressor
- ✓ Stainless lid

STAINLESS LID

1 YEAR

ECO-FRIENDLY R600a HYDROCARBON

TECHNICAL SPECIFICATION

MODEL	CF400S
PRICE	€639
DIMENSIONS	W1331 x D678 x H862
VOLUME	390 Lt
TEMPERATURE	-18°C to -24°C

CF500S

ONLY €699

REDUCED 2018

- ✓ 17 cu.ft capacity
- ✓ Fast freezing
- ✓ Static cooling
- ✓ Stainless lid
- ✓ Long life compressor

1 YEAR

TECHNICAL SPECIFICATION

MODEL	CF500S Freezer - S/S Top
PRICE	€699
DIMENSIONS	W1485 x D640 x H860
VOLUME	470 Lt
TEMPERATURE	-18°C to -24°C
SHIP WEIGHT	78Kg

STAINLESS LID

ECO-FRIENDLY R600a HYDROCARBON

Counter Top Display Chillers

Multi-level merchandise cooler at great value.

ONLY €459

REDUCED 2018

RD700

Display Cooler

- ✓ Forced air cooling
- ✓ LED internal lighting
- ✓ 3 levels of display
- ✓ 2 adjustable shelves
- ✓ Rear sliding doors

ECO-FRIENDLY R600a HYDROCARBON

1 YEAR

TECHNICAL SPECIFICATION	
MODEL	RD700 Display Cooler
PRICE	€459
DIMENSIONS	W695 x D462 x H675
CAPACITY	115Lt
TEMPERATURE	+3°C to +9°C
POWER	13 Amp Plug
WEIGHT	45Kg

Large Counter Top Display Chiller

Ideal for cakes, salads, sandwiches and pastries

REDUCED 2018

RDS900

ONLY €849

- ✓ Large display 900mm
- ✓ Heated front glass
- ✓ 2 Adjustable shelves

OPTIONAL ES900 STAND €189

TECHNICAL SPECIFICATION	
MODEL	RDS900
PRICE	€849
DIMENSIONS	W900 x D560 x H670
CAPACITY	160Lt
TEMPERATURE	+1°C to +8°C
POWER	13 Amp Plug

ECO-FRIENDLY R290 HYDROCARBON

1 YEAR

Chilled Preparation Top Display Chillers

Maximise worktop and cold prep areas.

Cold Toppings Fridges

CT-1400N
CT-1800N

FROM ONLY €599

ECO-FRIENDLY R600a HYDROCARBON

1 YEAR

- ✓ Counter top - prep starters, pizza, etc.
- ✓ All stainless steel construction
- ✓ Static cooling system
- ✓ Containers as shown GN ¼ not included
- ✓ Low running cost

CTL-1400N

MODEL	DESCRIPTION	PRICE	PANS	TEMP RANGE	DIMENSIONS	CONTAINER SET
CT-1400N	Cold Topper	€599	6 x GN¼	+2°C to +8°C	W1400 x D335 x H435	€27 (6) Lids €18 (6)
CT-1800N	Cold Topper	€649	9 x GN¼	+2°C to +8°C	W1800 x D335 x H435	€41 (9) Lids €27 (9)

CTL-1400N
CTL-1800N

Stainless Lid

FROM ONLY €599

ECO-FRIENDLY R600a HYDROCARBON

- ✓ Counter top - prep starters, pizza, etc.
- ✓ All stainless steel construction
- ✓ Static cooling system
- ✓ Containers as shown GN ¼ not included
- ✓ CFC free
- ✓ Low running cost

CTL-1800N

MODEL	DESCRIPTION	PRICE	PANS	TEMP RANGE	DIMENSIONS	CONTAINER SET
CTL-1400N	Cold Topper	€599	6 x GN¼	+2°C to +8°C	W1400 x D335 x H435	€27 (6) Lids €18 (6)
CTL-1800N	Cold Topper	€649	9 x GN¼	+2°C to +8°C	W1800 x D335 x H435	€41 (9) Lids €27 (9)

Chilled & Frozen Display Cabinets

Cold and frozen produce won't hang around for long in these brilliantly ergonomic display merchandisers.

GDR200

Display Chiller

ONLY €499

ORDER TWO €469 EA

CHILLER

1 YEAR

ENERGY SAVINGS

ECO-FRIENDLY R600a HYDROCARBON

- ✓ Glass door fridge
- ✓ Digital display
- ✓ Even cooling
- ✓ Adjustable feet
- ✓ Door lock fitted
- ✓ Adjustable shelves

TECHNICAL SPECIFICATION	
MODEL	GDR200 Undercounter Fridge
PRICE	€499
DIMENSIONS	W600 x D595 x H850
CAPACITY	200Lt
ENERGY CLASS	B
SHIP WEIGHT	35 Kg

GDF200

Display Freezer

ONLY €559

ORDER TWO €529 EA

FREEZER

1 YEAR

ENERGY SAVINGS

ECO-FRIENDLY R290 HYDROCARBON

- ✓ Glass door freezer
- ✓ Digital display
- ✓ Temp -10°C/-20°C
- ✓ Manual defrost
- ✓ Reliable cabinet
- ✓ Door lock fitted

GLASS FROSTER

TECHNICAL SPECIFICATION	
MODEL	GDF200 Undercounter Freezer
PRICE	€559
DIMENSIONS	W600 x D595 x H850
CAPACITY	150Lt
ENERGY CLASS	B
SHIP WEIGHT	36 Kg

Chilled & Frozen Display Merchandisers

Cold and frozen produce won't hang around for long in these brilliantly ergonomic display cabinets.

GDR400

- ✓ Glass door
- ✓ Adjustable shelves
- ✓ Door lock and LED light
- ✓ Fan cooling
- ✓ 20 Shelf positions

ECO-FRIENDLY R600a HYDROCARBON

ONLY €679

2 YEAR

TECHNICAL SPECIFICATION

MODEL	GDR400 Display Chiller
PRICE	€679
DIMENSIONS	W600 X D585 X H1850
CAPACITY	370 Litres
TEMPERATURE	+2°C to +8°C
POWER	Plug-in
WEIGHT GROSS	82Kg

GDF400

- ✓ Six fixed shelves
- ✓ Vertical LED light
- ✓ Double glazed door
- ✓ Lockable door
- ✓ Quality compressor

ECO-FRIENDLY R290 HYDROCARBON

ONLY €949

TECHNICAL SPECIFICATION

MODEL	GDF400 Frozen Display Cabinet
PRICE	€949
DIMENSIONS	W600 X D585 X H1850
CAPACITY	370 Litres
TEMPERATURE	-15°C to -25°C
POWER	Plug-in
WEIGHT	111Kg

Chilled Displays - Fully Ventilated

Retail display coolers that have well-balanced refrigeration for drinks and food in a modern display case.

GDR300

- ✓ Adjustable shelves
- ✓ Vertical light
- ✓ Double glazed door
- ✓ Low running cost
- ✓ Lockable door
- ✓ Fully ventilated
- ✓ Rear castors
- ✓ Eco R600a

ONLY €599

TECHNICAL SPECIFICATION

MODEL	GDR300 Display Fridge
PRICE	€599
DIMENSIONS	W620 x D595 x H1921
CAPACITY	300 Litres
TEMP RANGE	1°C to +10°C
POWER	Plug-in 2.56Kw/24H
WEIGHT	89Kg

1 YEAR

ECO-FRIENDLY R600a HYDROCARBON

GDR800

ONLY €1099

- ✓ Double hinged doors
- ✓ 1°C - 10C Temp control
- ✓ Low running cost
- ✓ Fully ventilated
- ✓ 10 Shelves included
- ✓ Rear castors included

TECHNICAL SPECIFICATION

MODEL	GDR800 Display Cooler
PRICE	€1099
DIMENSIONS	W1000 X D730 X H2036
CAPACITY	800 Litres
TEMP RANGE	1°C to +10°C
POWER	Plug-in
WEIGHT	164Kg

Superb Frozen Display Merchandisers

Excellent design to maximise display effect of food in supermarkets and convenience stores.

GDF1300

Display Freezer

ONLY €2399

- ✓ Fully ventilated
- ✓ Frozen Retail Display
- ✓ Large Capacity
- ✓ Temp -17°C - 20°C
- ✓ 8 Adjustable shelves
- ✓ Interior LED lights
- ✓ 2 Lockable Doors

LED LIGHTS

ENERGY SAVINGS

1 YEAR

TECHNICAL SPECIFICATION	
MODEL	GDF1300
PRICE	€2399
DIMENSIONS	W1382 x D800 x H2135
VOLUME	1300 Lt
SHIP WEIGHT	215 Kg

GDF2100

Display Freezer

ONLY €2999

- ✓ Fully ventilated
- ✓ Frozen Retail Display
- ✓ Large Capacity
- ✓ Temp -17°C - 20°C
- ✓ 12 Adjustable shelves
- ✓ Interior LED lights
- ✓ 3 Lockable Doors
- ✓ Castors

NEW

1 YEAR

TECHNICAL SPECIFICATION	
MODEL	GDF2100
PRICE	€2999
DIMENSIONS	W2079 x D800 x H2135
TEMPERATURE	-17°C to -20°C
POWER	13 Amp plug
NET WEIGHT	242Kg

Stainless Display Merchandisers

Excellent design to maximise display effect of food and drinks in supermarkets and convenience stores.

Unifrost commercial refrigeration

MDD1000

Multi-Deck Display Chiller

ONLY €1749

2 YEAR

ENERGY SAVINGS

LED LIGHTS

- ✓ 4 Display levels
- ✓ Dixell controller
- ✓ Adjustable shelves
- ✓ Night blind included
- ✓ Front bumper
- ✓ LED lighting
- ✓ Forced air circulation
- ✓ Auto defrost

TECHNICAL SPECIFICATION	
MODEL	MDD1000
PRICE	€1749
DIMENSIONS	W977 X D660 X H1830
TEMPERATURE	+4°C to +10°C
CAPACITY	320Lt
NETT WEIGHT	190Kg

Superb Display Merchandisers

Excellent design to maximise display effect of food and drinks in supermarkets and convenience stores.

MDD1200

Multi-Deck Display Chiller

ONLY €2099

2 YEAR

ENERGY SAVINGS

LED LIGHTS

AVAILABLE JUNE 2018

- ✓ 4 Display levels
- ✓ Dixell controller
- ✓ Adjustable shelves
- ✓ Night blind included
- ✓ Front bumper
- ✓ LED lighting
- ✓ Forced air circulation
- ✓ Auto defrost

TECHNICAL SPECIFICATION	
MODEL	MDD1200
PRICE	€2099
DIMENSIONS	W1200 X D700 X H1830
TEMPERATURE	+4°C to +10°C
CAPACITY	389Lt
WEIGHT	209Kg

Unifrost
commercial refrigeration

Serveover Chilled Display Counters

Elegant refrigeration showcase professional merchandiser and excellent prep work station.

ONLY
€1699

REAR STORAGE

DCF1300

- ✓ Ventilated cooling
- ✓ Stainless display 25” deck
- ✓ Chilled understorage
- ✓ Dixell digital controller
- ✓ Ambient upper shelf
- ✓ Granite worktop
- ✓ Internal LED light
- ✓ Curve glass front
- ✓ Hinged front for cleaning

1 YEAR

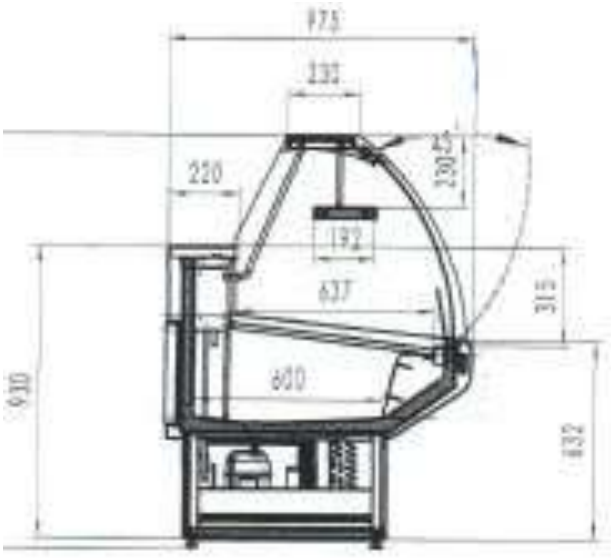

TECHNICAL SPECIFICATION

MODEL	DCF1300
PRICE	€1699
DIMENSIONS	W1280 X D975 X H1280
TEMPERATURE	3°C to 7°C
POWER	Plug-in
WEIGHT	209Kg

Serveover Chilled Display Counters

Elegant refrigeration showcase professional merchandiser and excellent prep work station.

ONLY
€1899

DCF1600

REAR STORAGE

1 YEAR

- ✓ Ventilated cooling
- ✓ Stainless display 25” deck
- ✓ Chilled understorage
- ✓ Dixell digital controller
- ✓ Ambient upper shelf
- ✓ Granite worktop
- ✓ Internal light LED
- ✓ Curve glass front
- ✓ Hinged front for cleaning

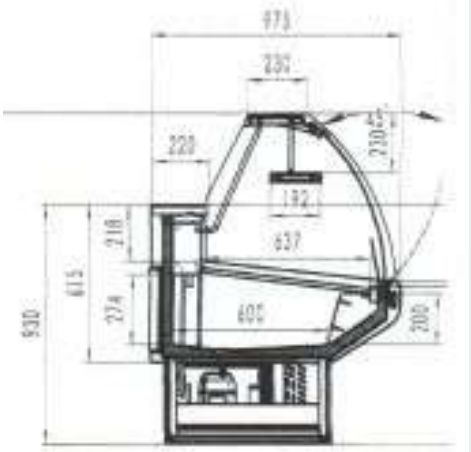

TECHNICAL SPECIFICATION

MODEL	DCF1600
PRICE	€1899
DIMENSIONS	W1580 X D975 X H1280
TEMPERATURE	3°C to 7°C
POWER	Plug-in
WEIGHT	251Kg

Serveover Chilled Display Counters

Elegant refrigeration showcase professional merchandiser and excellent prep work station with rear storage.

DCF1900

ONLY
€2099

- ✓ Ventilated cooling
- ✓ Stainless display 25” deck
- ✓ Chilled understorage
- ✓ Dixell digital controller
- ✓ Ambient upper shelf
- ✓ Granite worktop
- ✓ Internal light LED
- ✓ Curve glass front
- ✓ Hinged front for cleaning

REAR STORAGE

1 YEAR

TECHNICAL SPECIFICATION	
MODEL	DCF1900
PRICE	€1899
DIMENSIONS	W1880 X D975 X H1280
TEMPERATURE	3°C to 7°C
POWER	Plug-in
WEIGHT	246Kg

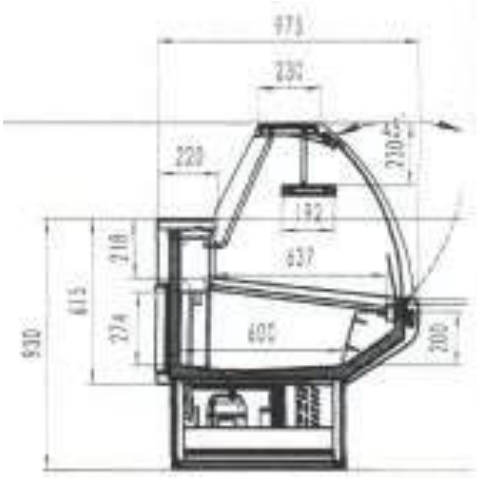

Patisserie Cake & Sandwich Display

Display your delicious produce in this elegant refrigerated show case with curved glass for maximum retail display.

Unifrost commercial refrigeration

ONLY
€1499

CDV90S

- ✓ Excellent product merchandiser
- ✓ Four level display
- ✓ Ventilated cooling
- ✓ Curved front glass
- ✓ LED lighting
- ✓ Temperature display
- ✓ 3 adjustable shelves
- ✓ Black exterior
- ✓ Double glazed
- ✓ Anti condense heater

ECO-FRIENDLY R290 HYDROCARBON

1 YEAR

TECHNICAL SPECIFICATION

MODEL	CDV90S
PRICE	€1499
DIMENSIONS	W900 x D800 x H1370
CAPACITY	335Lt
TEMPERATURE	+2°C to +8°C
POWER	13Amp Plug-in
WEIGHT	270Kg

Patisserie Cake & Sandwich Display Cases

Display your delicious produce in this elegant refrigerated show case with curved glass for maximum retail display.

CDV120S

ONLY
€1749

- ✓ Excellent product merchandiser
- ✓ Four level display
- ✓ Ventilated cooling
- ✓ Curved front glass
- ✓ LED lighting
- ✓ Temperature display
- ✓ 3 adjustable shelves
- ✓ Black exterior
- ✓ Double glazed
- ✓ Anti condense heater

ECO-FRIENDLY R290 HYDROCARBON

1 YEAR

TECHNICAL SPECIFICATION	
MODEL	CDV120S
PRICE	€1749
DIMENSIONS	W1200 x D750 x H1350
CAPACITY	400Lt
TEMPERATURE	+1°C to +8°C
SHELVES	3
POWER	13 Amp plug

Patisserie Cake & Sandwich Display

Display your delicious products in this elegant modern innovative square glass showcase.

ONLY
€1599

SDV90S

Showcase Chiller

- ✓ Enhanced styling
- ✓ Blends into any store concept
- ✓ LED interior lighting
- ✓ Easy to maintain and clean
- ✓ Eco gas for low running cost
- ✓ Temperature display
- ✓ Heated front glass
- ✓ Adjustable shelves

ENERGY SAVINGS

ECO-FRIENDLY R290 HYDROCARBON

1 YEAR

TECHNICAL SPECIFICATION	
MODEL	SDV90S
PRICE	€1599
DIMENSIONS	W900 x D750 x H1200
CAPACITY	290Lt
TEMPERATURE	+1°C to +8°C
SHELVES	3
POWER	13 Amp Plug

Patisserie Cake & Sandwich Display Cases

Display your delicious products in this elegant modern innovative square glass showcase.

SDV120S

Showcase Chiller

ONLY €1799

NEW

- ✓ Enhanced styling
- ✓ Meets any store concept
- ✓ LED interior lighting
- ✓ Easy to maintain and clean
- ✓ Eco gas for low running cost
- ✓ Temperature display
- ✓ Heated front glass
- ✓ Adjustable shelves

ENERGY SAVINGS

ECO-FRIENDLY R290 HYDROCARBON

1 YEAR

TECHNICAL SPECIFICATION	
MODEL	SDV120S
PRICE	€1799
DIMENSIONS	W1200 x D750 x H1200
CAPACITY	365Lt
TEMPERATURE	+1°C to +8°C
SHELVES	2
POWER	13 Amp Plug

Energy Efficient - Back Bar Coolers

Don't waste money!! Old bottle coolers can cost over €300 a year to run.
New coolers now consume less than €100 of electricity per annum.

BC10HBE

- ✓ Quick cooling
- ✓ Maximum display
- ✓ Built-in quality
- ✓ Great merchandisers
- ✓ Temp range +1°C to +10°C
- ✓ Black finish
- ✓ Locks fitted
- ✓ LED Interior light
- ✓ Dixell LED digital controller

ORDER ONE €439

ORDER TWO €399 EA

96 BOTTLES

1 YEAR

TECHNICAL SPECIFICATION	
MODEL	BC10HBE Display Cooler
PRICE	€439
DIMENSIONS	W605 x D515 x H900
SHIP WEIGHT	48Kg

ENERGY SAVINGS

ECO-FRIENDLY R600a HYDROCARBON

1.5Kw / 24Hr.

ONLY €699

BUY TWO €659 EA

BUY FOUR €629 EA

NEW

BC30HBE

- ✓ Ventilated interior
- ✓ Auto defrost
- ✓ LED Interior light
- ✓ Double-glazed doors
- ✓ Locks fitted
- ✓ Dixell digital controller

TECHNICAL SPECIFICATION	
MODEL	BC30HBE Display Cooler
PRICE	€699
DIMENSIONS	W1350 x D515 x H900
SHIP WEIGHT	110Kg

ECO-FRIENDLY R600a HYDROCARBON

3.9Kw / 24Hr.

1 YEAR

ENERGY SAVINGS

LED LIGHTS

264 BOTTLES

Energy Efficient - Back Bar Coolers

Don’t waste money!! Old bottle coolers can cost over €300 per year to run.
New coolers now consume less than €100 of electricity per annum.

BC20HBE

NEW

ONLY **€549**

BUY TWO **€519**

BUY FOUR **€489**

166 BOTTLES

LED LIGHTS

1 YEAR

1.9Kw / 24Hr.

ECO-FRIENDLY R600a HYDROCARBON

ENERGY SAVINGS

- ✓ **Large display storage**
- ✓ **Hinged doors**
- ✓ **Very reliable**
- ✓ **Temp range +1°C to +10°C**
- ✓ **Toughened glass inside and out**
- ✓ **Chromed shelves**
- ✓ **Aluminium interior**
- ✓ **Integral door locks**
- ✓ **Low noise fan**
- ✓ **Dixell digital display**
- ✓ **Front ventilated**
- ✓ **LED Interior light**

TECHNICAL SPECIFICATION

MODEL	BC20HBE Display Cooler
PRICE	€549/ 2 @€519/ 4@€489
DIMENSIONS	W905 x D515 x H900
SHIP WEIGHT	90Kg

Energy Efficient - Back Bar Coolers

Don't waste money!! Old bottle coolers can cost over €300 a year to run.
New coolers now consume less than €100 of electricity per annum.

BC20SBE

ONLY **€579**

BUY TWO **€549** EA

BUY FOUR **€519** EA

166 BOTTLES

LED LIGHTS

NEW

1.9Kw / 24Hr.

ECO-FRIENDLY R600a HYDROCARBON

ENERGY SAVINGS

1 YEAR

- ✓ Large display storage
- ✓ Sliding doors
- ✓ Very reliable
- ✓ Temp range +1°C to +10°C
- ✓ Toughened glass inside and out
- ✓ Chromed shelves
- ✓ Aluminium interior
- ✓ Integral door locks
- ✓ Low noise fan
- ✓ Dixell digital controller
- ✓ Front ventilated
- ✓ LED Interior light

TECHNICAL SPECIFICATION

MODEL	BC20SBE Display Cooler (sliding doors)
PRICE	€579/ 2@€549/ 4@€519
DIMENSIONS	W905 x D515 x H900
SHIP WEIGHT	90Kg

Stainless Steel Low Energy Bar Coolers

Cold beverages won't hang around for long in these brilliant high quality back bar chillers.

BC20HSE

ONLY **€649**

BUY TWO **€619** EA

BUY FOUR **€599** EA

1.9Kw / 24Hr.

ECO-FRIENDLY R600a HYDROCARBON

- ✓ High grade stainless exterior
- ✓ Large display storage
- ✓ Hinged doors
- ✓ Temp range +1°C to +10°C
- ✓ Toughened glass inside and out
- ✓ Chromed shelves
- ✓ Aluminium interior
- ✓ Integral door locks
- ✓ Low noise fan
- ✓ Digital display
- ✓ Front ventilated
- ✓ Interior light

1 YEAR

166 BOTTLES

LED LIGHTS

ENERGY SAVINGS

TECHNICAL SPECIFICATION

MODEL	BC20HSE Display Cooler
PRICE	€729/ 2@€699/ 4@€669
DIMENSIONS	W905 x D515 x H900
SHIP WEIGHT	115Kg

Energy Efficient Upright Coolers.

Store multiple craft beers or wines in stylish low energy cooler.

BC500HBE

NEW

ONLY €1079

BUY TWO €1049 EA

- ✓ Large display storage
- ✓ Hinged doors
- ✓ Very reliable
- ✓ Temp range +2°C to +10°C
- ✓ Toughened glass inside and out
- ✓ 8 Chrome shelves
- ✓ Aluminium interior
- ✓ Integral door locks x 2
- ✓ Low noise fan
- ✓ Digital display Dixell
- ✓ LED Interior light

2.8Kw/24Hr

ECO-FRIENDLY R600a HYDROCARBON

1 YEAR

ENERGY SAVINGS

TECHNICAL SPECIFICATION

MODEL	BC500HBE
PRICE	€1079
DIMENSIONS	W920 x D520 x H1872
CAPACITY	490Lt. Gross
SHIP WEIGHT	175 Kg

Ice Makers

Self contained freestanding ice makers with excellent output and good storage capacity.

U45-13

ONLY
€899

U100-34

ONLY
€1499

2 YEAR

Both models feature:

- ✓ **Solid clear ice**
- ✓ **Built-in filter**
- ✓ **Hanning water pump**
- ✓ **Stainless body**
- ✓ **Low water consumption**
- ✓ **Adjustable legs**
- ✓ **Water cleaning & descale function**
- ✓ **Simple to install**
- ✓ **Vertical evaporator**
- ✓ **Scoop and hoses included**

TECHNICAL SPECIFICATION	
MODEL	U45-13
PRICE	€899
DIMENSIONS	W505 x D656 x H845
MAX OUTPUT	45Kg (99LBS) per day
STORAGE	13Kg (29LBS)

TECHNICAL SPECIFICATION	
MODEL	U100-34
PRICE	€1499
DIMENSIONS	W715 x D656 x H960
MAX OUTPUT	102Kg (226LBS) per day
STORAGE	34Kg (75LBS)

Hi-Output Commercial Ice Maker

Slim line cuber where ice demand is high and floor space is premium.

U160-100

ONLY €2099 complete set

- ✓ Contemporary style
- ✓ Solid ice cubes
- ✓ Vertical evaporator
- ✓ Hanning water pump
- ✓ EBM condensor fan
- ✓ Low water consumption
- ✓ Water filter recommended for hard water
- ✓ Adjustable legs
- ✓ Bottom drain outlet
- ✓ Scoop & hoses included

2 YEAR

158Kg Output

104Kg Storage

U160-100 Production Unit

ONLY €1549

DIMENSIONS W560 x D618 x H568

U160B Storage Bin

ONLY €550

DIMENSIONS W560 x D830 x H1100

TECHNICAL SPECIFICATION

MODEL	U210-180
PRICE	€2099
DIMENSIONS	W560 x D830 x H1668
MAX OUTPUT	158Kgs (348LBS) per day
STORAGE	104Kgs (230LBS)
POWER	13 Amp plug

Hi-Output Commercial Ice Maker

Make every beverage special with lots of ice from this air cooled machine.

U210-180

ONLY
€2499
COMPLETE SET

180Kg
Storage

2 YEAR

- ✓ Solid ice cubes
- ✓ Low water consumption
- ✓ Vertical Evaporator
- ✓ Hanning water pump
- ✓ Water filter recommended for hard water
- ✓ Bottom drain outlet

TECHNICAL SPECIFICATION	
MODEL	U210-180
PRICE	€2499
DIMENSIONS	W780 x D840 x H1720
MAX OUTPUT	208Kgs (458LBS) per day
STORAGE	180Kgs (397LBS)

208Kg

U210-180 Production Unit

ONLY
€1799

DIMENSIONS W780 x D840 x H570

U210B Storage Bin

ONLY
€700

DIMENSIONS W780 x D840 x H1150

Ice Makers

Hoshizaki's air cooled Emerald Class IM ice cubers, designed for bar, cafe or restaurant use.

HOSHIZAKI

EXCEPTIONAL QUALITY, WORLD-CLASS, BEVERAGE COOLING SOLUTIONS

Emerald Class ICEMAKERS

ONLY €1199

€0.41 PER DAY CAPITAL COST OVER 8 YEARS

IM-21CNE-HC

Ice Maker

- ✓ **Compact & space saving**
- ✓ **Reliable & consistent output**
- ✓ **Hygienic & rust-free stainless exterior**
- ✓ **Uses natural refrigerant R290**

TECHNICAL SPECIFICATION	
Model	IM-21CNE-HC
Price	€1199
Output	Up to 24kg per day
Storage	11.5kg
Size	W 398 x D 451 x H 695 mm
Ice Cube	Cube - 28 x 28 x 32 mm
Power	13 Amp plug

R290 ENERGY GAS SAVING

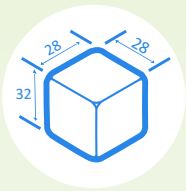

2 YEAR

ONLY €1799

€0.62 PER DAY CAPITAL COST OVER 8 YEARS

IM-45CNE-HC

Ice Maker

- ✓ **Reduced running costs**
- ✓ **Large insulated storage bin**
- ✓ **Clear, square ice cubes**
- ✓ **Uses natural refrigerant R290**

TECHNICAL SPECIFICATION	
Model	IM-45NE-HC
Price	€1799
Output	Up to 44kg per day
Storage	18kg
Size	W 503 x D 456 x H 930 mm
Ice Cube	Cube - 28 x 28 x 32 mm
Power	13 Amp plug

Ice Makers

These high output and modest footprint ice makers are ideal machines for busy bars or pubs with peak periods in the evenings and at weekends.

IM-100NE-HC

Ice Maker
Hi-Output Cuber

ONLY
€3199

- ✓ **Largest storage capacity**
- ✓ **Prudent investment**
- ✓ **Great capital return**
- ✓ **Uses natural refrigerant R290**
- ✓ **Fresh water input**
- ✓ **Automatic rinse flush**
- ✓ **Hygienic closed water circuit**

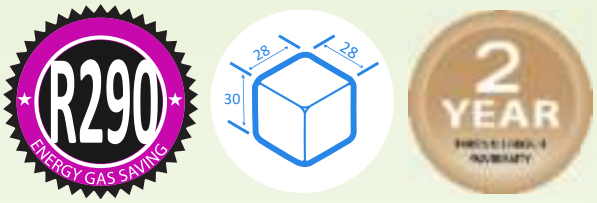

TECHNICAL SPECIFICATION

Model	IM-100NE-HC
Price	€3199
Output	UP 105 Kg per day
Storage	50 Kg
Size	W704 x D506 x H1290
Ice Cube	28 x 28 x 32
Power	13 Amp plug

BLUE SEAL

The All New SR Series Six Burner

Gas Range

G750-6 NAT
G750-6 LPG

ONLY
€2299

- ✓ 750mm deep for easy access
- ✓ Gastronorm GN ⅔ oven
- ✓ Powerful 5.8Kw burners
- ✓ Oven 7.9Kw
- ✓ Side hinged oven doors
- ✓ Vitreous oven interior
- ✓ 5 Shelf position oven
- ✓ Stainless finish

TECHNICAL SPECIFICATION

MODEL	G750-6NAT & GT50-6LPG
PRICE	€2299
DIMENSIONS	W900 x D750 x H890
POWER	42.7Kw (147,000 BTU)
OVEN	GN ⅔, 2 shelves
OVEN TEMP	130°C to 270°C
CONNECTION	¾ (BSP) Female
NETT WEIGHT	110 Kg
CASTORS	€90 optional extra

Gas Salamander

CS9

ONLY
€1699

- ✓ Infra-red gas burners
- ✓ Two 4.4Kw burners
- ✓ Twin control
- ✓ Wall bracket supplied
- ✓ Rack size 610 x 310mm

TECHNICAL SPECIFICATION

MODEL	CS9
PRICE	€1699
DIMENSIONS	W900 x D422 x H450 mm
POWER	8.8Kw (30,000) BTU
CONNECTION	½" BSP
NETT WEIGHT	42Kg

Tube Fired Free Standing Fryers

Freestanding single tank, twin basket gas deep fat fryer.

CE-35CS NAT / LP

ONLY
€1599

- ☑ **80lbs fries per hour**
- ☑ **Triple burners (105,000 BTUs)**
- ☑ **Stainless steel fry pan**
- ☑ **Wire mesh baskets**
- ☑ **21 Litre oil capacity**
- ☑ **LPG or natural gas**

EXTRA BASKETS
€35 EACH

TECHNICAL SPECIFICATION

MODEL	CE-35CS / NAT GAS Twin Basket Fryer CE-35CS / LP GAS Twin Basket Fryer
PRICE	€1599
DIMENSIONS	W394 X D770 X H900/1200
TEMPERATURE	90°C - 190°C
CONNECTION	3/4" Gas
SHIP WEIGHT	78Kg

Gas Hose

1/2" Safety Quick Release Coupling
€75

Heavy Duty Gas Hobs With Pilot Lights

High output, professional boiling tops for any kitchen.

Banks

spirit of catering

ONLY €599

B40H

LP / NAT

FOUR BURNERS

- Battery ignition
- 7.3Kw burners
- Heavy duty hob
- Four controls
- Adjustable feet
- Pilot on burners
- Optional stand ES610 €139

TECHNICAL SPECIFICATION

MODEL	B40H 4 Burner Hob
PRICE	€599
DIMENSIONS	W615 x D700 x H322
POWER	25 Kw
CONNECTION	3/4" BSP
SHIP WEIGHT	42Kg

B60H

LP / NAT

- Powerful burners
- Heavy duty hob
- Independent controls
- Stainless construction
- Adjustable legs
- Pilot on burners
- Battery ignition

Gas Hose

3/4" Safety Quick Release Coupling €75

TECHNICAL SPECIFICATION

MODEL	B60H 6 Burner Hob
PRICE	€799
DIMENSIONS	W915 x D700 x H322
POWER	44Kw Gas 150,000 BTU
CONNECTION	3/4" BSP
SHIP WEIGHT	62Kg

ONLY €799

ONLY €189

Option Stand ES910

SSE610

SNACK GRILL

ONLY €199

- Nickel steel
- Timer (15 mins)
- Toaster rack
- Drip tray

TECHNICAL SPECIFICATION

MODEL	SSE610 Compact Grill
PRICE	€199
DIMENSIONS	W610 x D305 x H280
POWER	2Kw Plug-in
SHIP WEIGHT	14Kg

Gas Ranges

Heavy duty 6 burner cooker with large oven for perfect cuisine every day that won't burn a hole in your pocket.

GR6N
GR6L

BUY TWO
€1699

BUY TWO
€1599 EA

NEW

- ☑ 6 Powerful burners
- ☑ Cast iron trivets
- ☑ Drop down oven door
- ☑ 2 Large oven racks
- ☑ Nat or LPG gas
- ☑ High quality stove
- ☑ Top brand components
- ☑ Castors included

Gas Hose

3/4" Safety Quick Release Gas Hose €75

TECHNICAL SPECIFICATION

MODEL	GR6N or GR6L
PRICE	€1699
DIMENSIONS	W900 x D835 x H911
POWER	45Kw GAS
CONNECTION	3/4" MALE
SHIP WEIGHT	182Kg

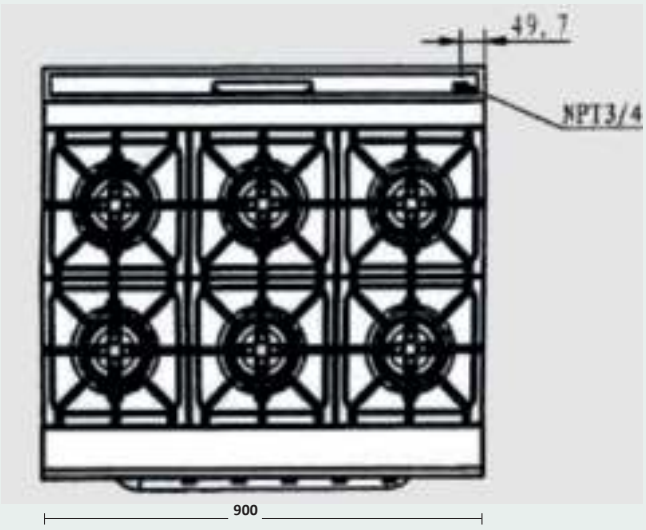

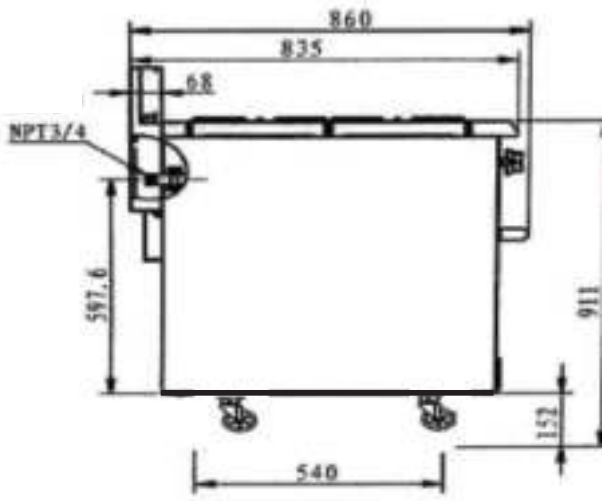

Counter Top Deep Fat Fryers

Table top, super fast, single tank or double tank electric fryers.

Banks

spirit of catering

ONLY €149

EF6

- 6 litre tank
- Simple controls
- Safety stat
- Plug-in

TECHNICAL SPECIFICATION

MODEL	EF6 Single Tank Fryer
PRICE	€149
DIMENSIONS	W265 x D410 x H340
POWER	3Kw
SHIP WEIGHT	6Kg

EFD6

- 2 x 6 litres tanks
- Safety stat
- Easy clean
- Versatile
- Plug-in

TECHNICAL SPECIFICATION

MODEL	EFD6 Twin Tank Fryer
PRICE	€239
DIMENSIONS	W550 x D410 x H340
POWER	2 x 3Kw
SHIP WEIGHT	12Kg

ONLY €239

ONLY €369

EFD8

- 2 x 8 litres tanks
- Safety stat
- Easy clean
- Two drain taps

TECHNICAL SPECIFICATION

MODEL	EFD8 Twin Tank Fryer
PRICE	€369
DIMENSIONS	W580 x D550 x H410
POWER	2 x 3Kw
SHIP WEIGHT	18Kg

Electric Freestanding Fryer - 18Kw Heavy Duty

Professional robust and reliable electric fryer with fast recovery and excellent output.

EF28-18

ONLY
€1099

- ☑ High output fryer
- ☑ Low maintenance
- ☑ Stainless body
- ☑ 2 baskets included
- ☑ Easy drain off oil
- ☑ Cold zone
- ☑ Minimal footprint
- ☑ Tank lid included

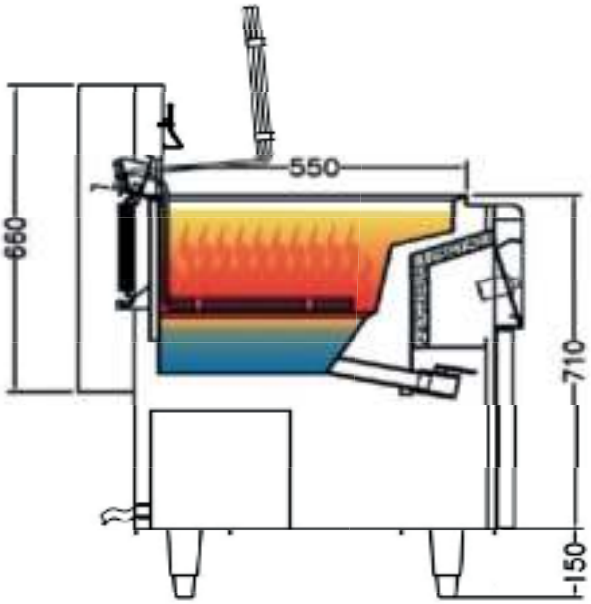

TECHNICAL SPECIFICATION

MODEL	EF28-18 Electric Fryer
PRICE	€1099
DIMENSIONS	W400 X D800 X H1100 at rear
POWER	18Kw (3 Phase)
CAPACITY	28 Litre oil
TEMPERATURE	50°C - 190°C
CONNECTION	3 Phase
SHIP WEIGHT	60Kg

Gas Free Standing Fryer - 3 Burners

Freestanding, fast, low cost, single tank, twin basket gas deep fat fryer.

Banks

spirit of catering

GF30

ONLY **€999**

BUY TWO **€949** EA

BUY FOUR **€899** EA

- ☑ 40lbs Fries per hour
- ☑ 3 Burner 83000 BTU
- ☑ Stainless steel tank
- ☑ 2 Nickel plated baskets
- ☑ Long life construction
- ☑ Oil capacity - 23 Litres
- ☑ Eurosit gas valve
- ☑ Robertshaw thermostat

TECHNICAL SPECIFICATION

MODEL	GF30N NAT GAS TWIN Basket Fryer GF30L LP GAS Twin Basket Fryer
PRICE	€999
DIMENSIONS	W394 X D778 X H1195
POWER	83,000 BTU (24kw)
TEMPERATURE	95°C - 190°C
CONNECTION	1/2”
SHIP WEIGHT	102Kg

EXTRA BASKETS €35 EA
165 x 335 x 150

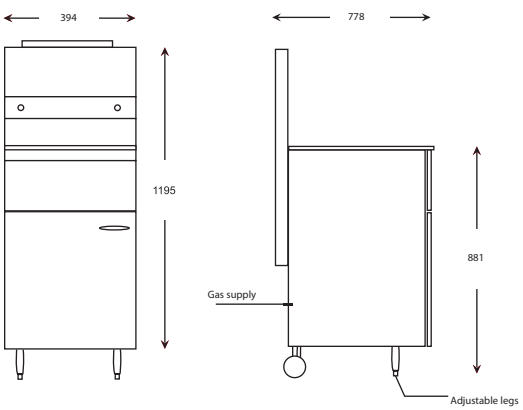

STAINLESS COATED TANK

3 BURNERS

3 YEAR TANK WARRANTY

Gas Hose

1/2” Safety Quick Release Gas Coupling €65

GAS

TWIN BASKET FRYER

Super Fast Free Standing 4 Burner Gas Fryer

Freestanding, fast, low cost, single tank, twin basket gas deep fat fryer.

GF40

- 50 Lbs fries per hour
- 36 Litre oil capacity
- Easy clean pans
- Large drain off
- Nickel plated baskets
- 4 Burners (35Kw)
- Robertshaw thermostat
- Eurosit gas valve

ONLY €1199

BUY TWO €1149 EA

BUY FOUR €1099 EA

Thermopile
Thermocouple
Fast recovery

3 YEAR TANK WARRANTY

GAS

TWIN BASKET
SINGLE TANK

Gas Hose

1/2" Safety Quick Release Gas Coupling €65

4 BURNERS

EXTRA BASKETS €35 EA
165 x 335 x 150

TECHNICAL SPECIFICATION

MODEL	GF40N Twin Basket Fryer GF40L Twin Basket Fryer
PRICE	€1199
DIMENSIONS	W394 X D778 X H900/ 1195
POWER	109,000 BTU (32kw)
TEMPERATURE	95°C - 190°C
CONNECTION	1/2"
SHIP WEIGHT	78Kg

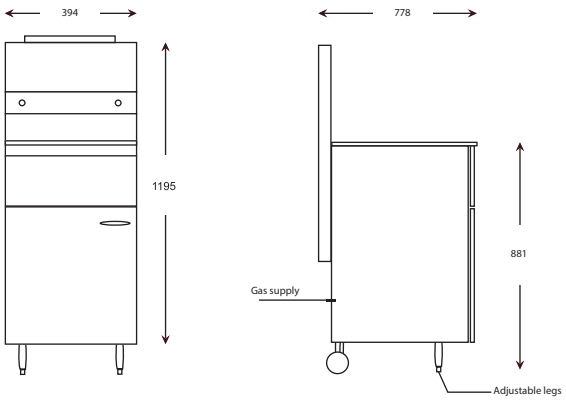

Heat Lamps, Hot Display & Toaster

Banks

spirit of catering

HL3 & HL5

- Ideal for hot gantry
- Kitchen hot lamps
- Stainless housing
- 150 Watts per lamp
- Economic to run

FROM €199

Halogen Lamps

TECHNICAL SPECIFICATION

MODEL	HL3 3 x Hot Lamps
PRICE	€199
DIMENSIONS	W950 x D120 x H53
POWER	450 Watts (13 Amp plug)
WEIGHT	4Kg

TECHNICAL SPECIFICATION

MODEL	HL5 5 x Hot Lamps
PRICE	€269
DIMENSIONS	W1450 x D120 x H53
POWER	750 Watts (13 Amp plug)
WEIGHT	6Kg

HSC660 Heated Display

- Humidity
- Luxury design
- Stainless base
- Easy access
- 4 sides display
- Gastronorm interior

ONLY €349

TECHNICAL SPECIFICATION

MODEL	HSC660
PRICE	€349
DIMENSIONS	W660 x D437 x H635
TEMPERATURE	30°C to 110°C
POWER	13 Amp plug (1.3Kw)
SHIP WEIGHT	29Kg

CT400 Conveyor Toaster

- Toasts bread, bagels, buns
- Heavy duty conveyor
- Up to 300 pieces per hour
- Variable speed and toasting

ONLY €489

TECHNICAL SPECIFICATION

MODEL	CT400 Conveyor Toaster
PRICE	€489
DIMENSIONS	W389 x D440 x H385
POWER	2.4Kw
WEIGHT	18Kg

Commercial Panini Contact Grills

The fast, versatile and healthier way to cook food.

PCG-RF

ONLY €249

- Flat bottoms, ribbed tops
- Robust cast iron plates
- Temp 50° to 300°C
- Heat lamp indicator
- On/off lamp
- Large fat tray
- Plug included
- Ideal for cafes, pubs, restaurants & caterers

TECHNICAL SPECIFICATION

MODEL	PCG-RF Panini Grill
PRICE	€249
DIMENSIONS	W410 x D370 x H210
BOTTOM GRILL	W335 x D230
POWER	2.2Kw Plug-in
SHIP WEIGHT	19Kg

TCG-RF

ONLY €349

TECHNICAL SPECIFICATION

MODEL	TCG-RF Double Panini Grill
PRICE	€349
DIMENSIONS	W570 x D370 x H210
BOTTOM GRILL	W470 x D230
POWER	3.6Kw
SHIP WEIGHT	26Kg

Electric Crepe Grill And Griddles

Multi function, cost effective reliable flat tops.

CM400 Crepe Maker

ONLY €269

NEW

- Makes, crepes, pancakes, flat cakes, chapatis and lots more
- Fast output
- Special cast plate
- Spreader & spatula included

TECHNICAL SPECIFICATION

MODEL	CM400
PRICE	€269
DIMENSIONS	W450 x D485 x H240
POWER	3Kw
WEIGHT	23Kg

Crepe Maker

EFT400 Fry Top

ONLY €249

NEW

3Kw Griddle

- Portable plug-in
- 10mm Thick fry plate
- Easy clean surface
- Compact foot print
- Cook plate 400x400
- Splash guard 30 mm

TECHNICAL SPECIFICATION

MODEL	EFT540
PRICE	€249
DIMENSIONS	W400 x D500 x H200
TEMPERATURE	50°C - 300°C
POWER	3Kw Plug-in
NETT WEIGHT	23Kg

Griddle Fry Tops

This flat surface griddle cooks meats, eggs, vegetables, pancakes and lots more.

REDUCED 2018

EFT610

ONLY €349

- Flat surface grill 600x400
- Fast powerful recovery
- Twin zone control
- Variable thermostat
- 30 Amp connection
- Splash guard 30 mm

TECHNICAL SPECIFICATION

MODEL	EFT610
PRICE	€349
DIMENSIONS	W610 x D540 x H270
POWER	6Kw (30 Amp) Electric
WEIGHT	44Kg

6Kw Griddle

Chromed Fry Top Electric Griddles

Heavy duty griddle with fast recovery for grilling and frying

REDUCED 2018

EGC600

ONLY €799

- Smooth chrome plate 14mm
- Fast even cooking
- Very easy to clean
- Twin control
- Integral fat box

TECHNICAL SPECIFICATION

MODEL	EGC600 (chrome plated)
PRICE	€799
DIMENSIONS	W600 x D650 x H335/475
POWER	7.8Kw 3 Phase
WEIGHT	64Kg

7.8Kw Griddle

Gas Griddle Fry Top

Hi-output, great value freestanding cooking equipment.

FT615N NAT GAS
FT615L LPG GAS

ONLY €899

NEW

- Twin controls
- Two burners
- Piezo ignitor
- Smooth steel
- Stand included
- 2 Wheels at rear

Gas Hose

3/4" Safety Quick Release Gas Coupling €75

TECHNICAL SPECIFICATION

MODEL	FT615N AND FT615L
PRICE	€899
DIMENSIONS	W600 x D800 x H920
POWER	12.4 Kw(42,600Btu)
BURNERS	2
WEIGHT	121 Kg

AVAILABLE JUNE 2018

Gas Char Grill

CG600N NAT GAS
CG600L LPG GAS

ONLY €999

NEW

- Twin controls
- Two burners
- Radiant cast iron
- Piezo ignitor
- Stainless construction
- Stand included
- 2 Wheels at rear

Gas Hose

3/4" Safety Quick Release Gas Coupling €75

TECHNICAL SPECIFICATION

MODEL	CG600N AND CG600L
PRICE	€999
DIMENSIONS	W615 x D800 x H920
POWER	9.4 Kw(32,200 Btu)
BURNERS	2
WEIGHT	149 Kg

Gas Griddles - Grills - Doner Rotisserie

ARCHWAY

NAT GAS
LPG GAS

Quality heavy duty Gas Grills
Very Robust and long lasting

GAS GRIDDLE SINGLE BURNER B1BG

ONLY €899

- 1.2 mm Steel plate
- Variable heat/efficient burner
- Large fat box
- Cook area 441x442
- Spark igniter
- 3 Sided splash guard
- Easy to clean

TECHNICAL SPECIFICATION

MODEL	B1BG single burner griddle
PRICE	€899
DIMENSIONS	W450 x D660 x H380
OUT PUT	Ng 3-2 Kw, LPG 2.8 Kw
CONNECTION	1/2" GAS

GAS GRIDDLE-TWIN BURNER B2BG

ONLY €1199

- Two efficient burners
- Smooth steel plate
- Spark igniter
- Twin controls
- Two heat zones
- Cook area 696x491
- Large grease box
- 3 Sided splash guard
- Easy to clean

TECHNICAL SPECIFICATION

MODEL	B2BG Twin burner griddle
PRICE	€1199
DIMENSIONS	W700 x D660 x H380
OUT PUT	Ng 6.4 Kw, LPG 5.6 Kw
CONNECTION	1/2" GAS

CHAR GRILL B2BS

ONLY €1999

- Lava stone grill
- Twin controls
- Fast output
- Cast iron burner
- Pilot ignition
- Adjustable grill height
- Large branding grid
- Variable controls
- Enhance food taste
- Large drip tray

TECHNICAL SPECIFICATION

MODEL	B2BS
PRICE	€1999
DIMENSIONS	W600 x D715 x H515
OUT PUT	14 Kw (48000 BTU)
CONNECTION	1/2" GAS

KEBAB 4 BURNER GRILL B4BSTD

ONLY €1349

- 4 Ceramic burners
- High capacity
- Low running cost
- Hygienic stainless
- 4 Gas controls
- Bottom rotation

TECHNICAL SPECIFICATION

MODEL	B4BSTD Kebab grill
PRICE	€1349
DIMENSIONS	W565 x D655 xH1100
OUT PUT	13.6 Kw NAT-11.2 Kw LPG
CONNECTION	1/2" GAS

Food Warmers And Soup Kettles

Banks

spirit of catering

SK11CR

ONLY €79

NEW

- Digital controlled
- Insulated pot
- Easy serve flip lid
- Ladle notch
- High class red finish
- Can be integrated in counters

11 Litres

TECHNICAL SPECIFICATION

MODEL	SK11CR
PRICE	€79
DIMENSIONS	W340 x D375 x H325
CAPACITY	11Lt
POWER	13 Amp plug (1.3Kw)
NETT WEIGHT	8Kg

SK9S

- Modern stainless design
- Space saving
- Hygienic surface

TECHNICAL SPECIFICATION

MODEL	SK9S
PRICE	€89
DIMENSIONS	W320 x H400
CAPACITY	9Lt
POWER	2Kw
NETT WEIGHT	7Kg

ONLY €89

NEW

9 Litres

ONLY €69

- 9 Lt stainless steel pot
- Black body
- Temp 30°C - 95°C
- Ladle cut out

9 Litres

TECHNICAL SPECIFICATION

MODEL	SK9 Soup Kettle
PRICE	€69
DIMENSIONS	W360 x H400
POWER	2Kw
WEIGHT	6Kg

Counter Top Bain Maries And Hot Cupboard

Perfect hot food storage where space is premium.

ONLY €129

Bain Marie

BMW1

- GN 1/1 opening
- Simmer control
- Wet well

TECHNICAL SPECIFICATION

MODEL	BMW1 Open bain marie
PRICE	€129
DIMENSIONS	W355 x D560 x H240
CAPACITY	GN 1/1 x 150mm
POWER	1.2Kw
WEIGHT	6Kg

ONLY €159

Bain Marie with Pans

BMW3

- 3 GN pans included
- Temperature controls
- Stainless steel

TECHNICAL SPECIFICATION

MODEL	BMW3 Bain marie food warmer
PRICE	€159
DIMENSIONS	W355 x D560 x H240
CAPACITY	GN 1/1 x 100mm
POWER	1.2Kw
WEIGHT	8Kg

HC750 Hot Cupboard

ONLY €459

- Hold up to 120 Plates
- Variable themostat control
- Two level interior
- Adjustable mid shelf
- All stainless
- Semi portable

TECHNICAL SPECIFICATION

MODEL	HC750
PRICE	€459
DIMENSIONS	W750 x D450 x H855
CAPACITY	285Lt
POWER	1.2Kw Plug-in
WEIGHT	49Kg

Food Warming - Bain Maries with Hot Cupboard

Heavy duty gastronorm food warmer with heated cupboard under. Thermostatically controlled even heat distribution for energy saving and low running cost.

BMHC3

ONLY €1499

3 GN ⅓ Pans 150mm + Lids
Only €69

- ☑ Open 3GN bain marie (wet)
- ☑ Heated base cupboard
- ☑ Digital controller
- ☑ All stainless 304
- ☑ Strong build quality
- ☑ Temperature display

Optional Gantry with heated lamps €430

TECHNICAL SPECIFICATION

MODEL	BMHC3 3GN
PRICE	€1499
DIMENSIONS	W1100 x D700 x H870
POWER	3.85Kw (20 Amp)
WEIGHT	64Kg

TWO TIER GANTRY

BMDG1100 €299

BMDG1400 €369

- ☑ Easy fit to bain maries
- ☑ 304 Stainless hi-grade
- ☑ Install kit included

MODEL	
BMDG1100	W1100 X D333 X H765
BMDG1400	W1400 X D333 X H765

BMHC4

ONLY €1699

- ☑ Open 4GN bain marie (wet)
- ☑ Heated base cupboard
- ☑ Digital controller
- ☑ All stainless 304
- ☑ Strong build quality
- ☑ Temperature display

4 GN ⅓ Pans 150mm + Lids
Only €92

TECHNICAL SPECIFICATION

MODEL	BMHC4 4GN
PRICE	€1699
DIMENSIONS	W1406 x D700 x H870
POWER	3.85Kw (20 Amp)
WEIGHT	74Kg

Banks

spirit of catering

Banqueting Hot Food Cart

Function or buffet, on or off site, this cart holds food for flexible service to customers.

BFW500

ONLY
€1799

- ☑ Consistent temperature control
- ☑ Stainless construction
- ☑ Robust and long lasting
- ☑ Kitchen fresh every time
- ☑ 11 Shelf levels (115mm gaps)
- ☑ Easy front-mounted control
- ☑ Insulated body
- ☑ Heavy duty castors
- ☑ Humidity control by water pan
- ☑ 11 Stainless racks included
- ☑ Twin pull / push bars
- ☑ Large GN ⅔ interior

Hot Food Holding Cart

TECHNICAL SPECIFICATION

MODEL	BFW500
PRICE	€1799
DIMENSIONS	W800 x D975 x H1790
CAPACITY	500 Litres
TEMPERATURE	30°C to 110°C
CAMBER	W535 x D675D x H1385
POWER	13 Amp plug (1.85Kw)

Banks

spirit of catering

Professional Pizza Ovens

With fire brick bake decks and outstanding build quality. This Banks pizza oven is virtually maintenance free.

TP6161

ONLY €1199

- 4x12" large pizzas per deck
- Smooth, fire brick hearth
- Professional oven
- 4 way controls

TECHNICAL SPECIFICATION

MODEL	TP6161 Pizza Oven
PRICE	€1199
DIMENSIONS	W910 x D820 x H750
DECK SIZES	610 x 610 (2 Decks)
POWER	8.4Kw 3 Phase
SHIP WEIGHT	118Kg

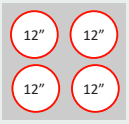

Bottom Deck 610mm

610mm

NEW

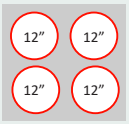

Top Deck 610mm

610mm

Stainless Steel Stand:

CT9080 (TP6666) W900 x D800 x H850 Price: €239

BAKES 8 LARGE 12" PIZZAS

SP6161

ONLY €699

- Bakes 4 x 12" pizzas
- Single stone hearth
- Easy to install
- Long lasting oven

TECHNICAL SPECIFICATION

MODEL	SP6161 Pizza Oven
PRICE	€699
DIMENSIONS	W910 x D820 x H430
DECK SIZES	610 x 610
POWER	4.2Kw 3 Phase
SHIP WEIGHT	68Kg

BAKES 4 LARGE 12" PIZZAS

Electric - Single Deck Pizza Oven

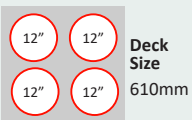

Deck Size 610mm

610mm

Compact Convection Oven

Superb build quality and reliability come as standard from this market leader in convection ovens.

CV0600

ONLY €499

BUY TWO €469 EA

- ☑ **4 trays (433 x 333) included**
- ☑ **Can cook up to 300°C**
- ☑ **Timer 0-120min**
- ☑ **Double glazed door**
- ☑ **Easy clean surface**
- ☑ **Versatile countertop oven for baking, reheating or fast thawing**

TECHNICAL SPECIFICATION

MODEL	CV0600 Hi-speed Convection Oven
PRICE	€499
DIMENSIONS	W595 x D530 x H570
POWER	2.7Kw plug-in
TEMPERATURE	50°C - 300°C
SHIP WEIGHT	38Kg

Banks

spirit of catering

Gastronorm-Express Convection Ovens

Strong build quality comes as standard from this popular size convection oven.

CV0790

ONLY €899

BUY TWO €869 EA

- Accepts 4 GN ⅓ Trays
- Can cook up to 300°C
- Timer 0-120min
- Double glazed door
- 7 shelf positions
- Versatile countertop oven for baking, reheating or fast thawing
- Very portable
- Hold function

4 WIRE RACKS INCLUDED

OPTIONAL RS9080 STAND

STAND €299

POPULAR WITH CONTRACT CATERERS

TECHNICAL SPECIFICATION

MODEL	CV0790 Hi-Speed convection oven
PRICE	€899
DIMENSIONS	W800 x D600 x H580
POWER	3.1 Kw plug-in
TEMPERATURE	50°C - 300°C
SHIP WEIGHT	74Kg

Large Convection/Bakery Ovens

This leading manufacturer of convection ovens has produced a perfectly controlled technological oven which gives super results every time.

CVO840

ONLY
€1199

ACCEPTS FULL SIZE BAGUETTES

- ☑ **Convect air system**
- ☑ **Perfect baking**
- ☑ **0 - 300°C Temperature**
- ☑ **Double glazed door**
- ☑ **120 Minute timer**
- ☑ **Bi-direction fans**
- ☑ **Two interior lamps**
- ☑ **600 x 400mm Racks**
- ☑ **4 Shelf Positions**
- ☑ **Stand Optional €299**

FREE
4 x BAKING TRAYS

TECHNICAL SPECIFICATION

MODEL	CV0840 Convection Oven
PRICE	€1199
DIMENSIONS	W835 X D672 X H570
POWER	6.4Kw (30 amp connection) 1 phase
TEMPERATURE	0 - 300°C
SHIP WEIGHT	72Kg

Heavy Duty Microwave Ovens

This robust oven is built for fast even heating and is very programmable to adapt to your menu.

Panasonic

NE-1853

1800 Watt
Very Fast Oven

ONLY €1149

- ✓ **2 + 3 Stage heating**
- ✓ **Easy clean interior**
- ✓ **Stainless body & cavity**
- ✓ **Top & bottom power energy**
- ✓ **Large LED display**
- ✓ **Interior lighting**
- ✓ **Easy view window**
- ✓ **Stackable, 2 ovens**

TECHNICAL SPECIFICATION

Model	NE-1853
Output	1800 Watt
Size	W422 x D508 x H337
Oven size	W330 x D310 x H175
Timer	30 Mins
Touch pad	10 Programmes
Menu	15 Power levels
Memory	30 Programmes
Power	2.83Kw (13 Amp plug)
Nett Weight	30Kg

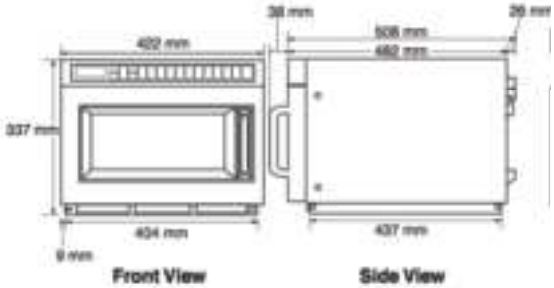

NE-1880

Commercial 1800 Watt
Gastronorm Interior

ONLY €2299

- ✓ **Large GN ⅓ interior**
- ✓ **Removable midshelf**
- ✓ **Preset or dial timer**
- ✓ **Drop down door**
- ✓ **Operations cycle counter**
- ✓ **16 Programmes**
- ✓ **2 & 3 stage heating**
- ✓ **One touch operation**

POWER REQUIRED
NE-1880 20 Amp connection

TECHNICAL SPECIFICATION

Output	NE-1880 1800 Watts
Output	NE-3280 3200 Watts
Interior	GN ⅓ Full size
Finish	All stainless
Door	Drop down
Size	W650 x D526 x H471
Oven	W535 x D330 x H250
Timer	60 Mins
Touch Pad	16 Memory
Menu	4 Power levels
Shelf	Removable
Weight	54Kg

Commercial Microwave Ovens

Sharp leads the way when it comes to microwaves and boasts some of the fastest ovens to run on a 13 Amp plug.

SHARP

ONLY €499

21-AT

- ☑ **1000 watt output**
- ☑ **Variable cooking power levels**
- ☑ **20 touch preset controls**
- ☑ **Flat bed surface**

TECHNICAL SPECIFICATION

MODEL	21-AT Microwave Oven
PRICE	€499
DIMENSIONS	W550 x D458 x H309
OUTPUT	1000 Watt
SHIP WEIGHT	20Kg

IDEAL FOR DESSERTS

MWS €79

W560xD400

SHARP

ONLY €1169

HEAVY DUTY

24-AT

- ☑ **1900 watt output**
- ☑ **Heavy duty**
- ☑ **20 presets in memory**
- ☑ **11 power levels**
- ☑ **Double quantity button**
- ☑ **Stackable space saving**
- ☑ **Internal Oven W330 x D330 x H180**

TECHNICAL SPECIFICATION

MODEL	24-AT Microwave Oven
PRICE	€1169
DIMENSIONS	W520 x D470 x H335
OUTPUT	1900 Watt
POWER	2.9Kw 13 Amp
SHIP WEIGHT	36Kgs

EXPRESS DEFROST

MWS €79

W560xD400

Convection Oven with Air Plus Technology
Reliable Powerful Everyday Baking & Cooking Oven

Special Features

- ✔ 600x400 Tray size
- ✔ Bake 30°C - 260°C
- ✔ Pre-Heating up to 260°C
- ✔ Reverse Fans
- ✔ Humidity 20% to 100%
- ✔ Simple to USE
- ✔ Thermal Efficient
- ✔ Cool glass door
- ✔ Hi-Vis Bake Chamber
- ✔ Durable Door Fittings
- ✔ LED Cavity Lighting
- ✔ Safety cut out switch

ONLY
€3499

XB 695
6 Rack
BAKERLUX

1. Key to select baking step
2. Baking step LED
3. Baking parameters display
4. Baking time LED
5. Baking temperature LED
6. Humidity LED
7. Fan LED
8. Time, temperature, humidity and fan speed select key
9. Baking parameters increase / decrease key
10. START/STOP baking cycle
11. Preset program selection keys
12. Program menu recall key
13. Program memory key
14. Key to select oven, prover

Dynamic Advantages

- *A- 99 Baking Programmes each one with 3 Steps + Pre-Heating*
- *B- Perfect Air Distribution given unifrom results in all areas of oven*
- *C- Correct amount of Humidity in first few minutes & execellent results on yeast breads*
- *D- No Humidity in final stage gives crisp golden finish*

Model	XB 695
Price	€ 3499
Dimensions	W860 x D882 x H930
Capacity	6 (600x400 Racks)
Power	10.5 Kw (Three Phase)
Weight	80 Kg

Examples - TOP 6

Program for Perfect Results	
P1 Scones	
P2 Muffins	
P3 Croissants	
P4 Pain au raisins	
P5 Bagels	
P6 Bread rolls	

Convection Oven with Air Plus Technology
Reliable Powerful Everyday Baking & Cooking Oven

Special Features

- ✔ 600x400 Tray size
- ✔ Bake 30°C - 260°C
- ✔ Pre-Heating up to 260°C
- ✔ Reverse Fans
- ✔ Humidity 20% to 100%
- ✔ Simple to USE
- ✔ Thermal Efficient
- ✔ Cool glass door
- ✔ Hi-Vis Bake Chamber
- ✔ Durable Door Fittings
- ✔ LED Cavity Lighting
- ✔ Safety cut out switch

ONLY
€4999

XB 895
10 Rack
BAKERLUX

1. Key to select baking step
2. Baking step LED
3. Baking parameters display
4. Baking time LED
5. Baking temperature LED
6. Humidity LED
7. Fan LED
8. Time, temperature, humidity and fan speed select key
9. Baking parameters increase / decrease key
10. START/STOP baking cycle
11. Preset program selection keys
12. Program menu recall key
13. Program memory key
14. Key to select oven, prover

Dynamic Advantages

- *A- 99 Baking Programmes each one with 3 Steps + Pre-Heating*
- *B- Perfect Air Distribution given unifrom results in all areas of oven*
- *C- Correct amount of Humidity in first few minutes & execellent results on yeast breads*
- *D- No Humidity in final stage gives crisp golden finish*

Model	XB 895
Price	€ 4999
Dimensions	W860 x D882 x H1250
Capacity	10 (600x400 Racks)
Power	15.8 Kw (Three Phase)
Weight	112 Kg

Program for Perfect Results

Examples - TOP 6

P1	Scones	
P2	Muffins	
P3	Croissants	
P4	Pain au raisins	
P5	Bagels	
P6	Bread rolls	

CHEFLUX combi ovens

Combi Cooking Centres

Demand highest quality results everyday from crispy roasts to steamed fish and your regular menu. Optimise cooking with every batch.

Pro-Chef Precision Cooking , retain vitamins and minerals

5 Rack 7 Rack 12 Rack

SPECIAL FEATURES

- Convection and Humidity 48C° to 260C°
- Convection cooking 30C° to 260C°
- Preheating up to 260C°
- Dual fan speeds
- Dry or Steam management
- Maximise thermal efficiency
- Hi-Vis door display
- Very simple to use
- Cook different foods at same time
- High quality 304 stainless interior
- Led cavity lighting
- Carbon fibre door lock

Easy Clean

Install Kits

Easy to use control panel

1- Temperature LED
2- Cooking time dial
3- Temperature dial
4- Humidity dial
5- Button to activate slower fan speed

CHEFLUX

Combi Oven

Steam, roast, bake, regenerate, cook, whatever you wish in this versatile combination oven.

XV 393

5 Rack Oven

ONLY €2699

- Reduce shrinkage
- Consistent cooking
- Save time and labour
- Elevate flavour and texture
- Improve energy efficient
- Combine steam and heat for excellent results

Install Kit

XUC 001

€ FREE

Shower Kit

XHC 001

€ 139

Water Softener

CS 10

€ 499

Oven Stand

€ 299

Model	XV 393
Price	€ 2699
Dimensions (WxDxH)	W 750 x D 773 x H 772 mm
Capacity	5 Shelf Positions
Power	7.1 KW Single or 3 Phase
Weight	67 KG

CHEFLUX

Combi Oven

Steam, roast, bake, regenerate, cook, whatever you wish in this versatile combination oven.

XV 593

7 Rack Oven

ONLY
€3679

- ✓ Reduce shrinkage
- ✓ Consistent cooking
- ✓ Save time and labour
- ✓ Elevate flavour and texture
- ✓ Improve energy efficient
- ✓ Combine steam and heat for excellent results

Install Kit

XUC 001

€ FREE

Shower Kit

XHC 001

€ 139

Water Softener

CS 10

€ 499

Oven Stand

€ 299

Model	XV 593
Price	€ 3679
Dimensions (WxDxH)	W 860 x D 882 x H 930 mm
Capacity	7 Shelf Positions
Power	10.5 KW 3 Phase
Weight	80 KG

CHEFLUX

Combi Oven

Steam, roast, bake, regenerate, cook, whatever you wish in this versatile combination oven.

XV 893

12 Rack Oven

ONLY €4999

- Reduce shrinkage
- Consistent cooking
- Save time and labour
- Elevate flavour and texture
- Improve energy efficient
- Combine steam and heat for excellent results

Install Kit

XUC 001

€ FREE

Shower Kit

XHC 001

€ 139

Water Softener

CS 10

Automatic Water Softener

€ 499

Oven Stand

Oven Stand RS 9080

€ 299

Model	XV 893
Price	€ 4999
Dimensions (WxDxH)	W 860 x D 882 x H 1250 mm
Capacity	12 Shelf Positions
Power	15.8 KW 3 Phase
Weight	112 KG

Mazzoni Electric Pizza Oven

Professional Single Deck Pizza Oven

With fire brick bake decks and outstanding build quality. This Mazzoni pizza oven is virtually maintenance free.

ONLY
€899

SP6666

- ☑ **Bakes 4 x 12” pizzas**
- ☑ **Twin stone hearth**
- ☑ **Easy to install**
- ☑ **Long lasting oven**

Single Deck Pizza Oven

TECHNICAL SPECIFICATION

MODEL	SP6666 Pizza Oven
PRICE	€899
DIMENSIONS	W980 x D815 x H415
DECK SIZES	W660 x D660 x H140
POWER	4.7Kw (30 amp) 1 Phase
SHIP WEIGHT	92Kg
STONES	W660 x D330 x H20

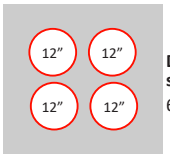

Deck size
660mm

Mazzoni

Electric Pizza Oven

Professional Twin Deck Pizza Oven

ONLY €1499

With fire brick bake decks and outstanding build quality. This Mazzoni pizza oven is virtually maintenance free.

TP6666

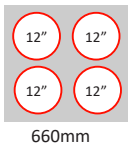

Top Deck 660mm

660mm

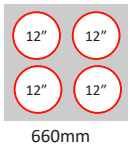

Bottom Deck 660mm

660mm

BEST SELLER ★★★

- 4 large pizzas per deck
- Smooth, fire brick hearth
- Professional oven
- 4 way controls

BAKES 8 LARGE 12" PIZZAS

ONLY €239

TECHNICAL SPECIFICATION

MODEL	TP6666 Pizza Oven
PRICE	€1499
DIMENSIONS	W980 x D815 x H745
DECK SIZES	W660 x D660 x H140
POWER	9.4Kw (2 x 30 Amps) 1 phase
SHIP WEIGHT	145Kg

Stainless Steel Stand:

CT9080 (TP6666) W900 x D800 x H850 Price: €239

Professional Dough Mixer

Classic heavy duty mixer, ideal for bakery and catering.
Reliable and well made for daily use.

Banks

spirit of catering

ONLY €1099

NEW

SDM30

AVAILABLE JUNE 2018

30 Litre

- **Bowl 30Lt**
- **Flour volume 12Kg**
- **Dough capacity 20Kg**
- **Timer - for batch control**
- **Brilliant white body**
- **Stainless lift up guard**
- **Excellent value**

TECHNICAL SPECIFICATION

MODEL	SDM30 Spiral Mixer
PRICE	€1099
DIMENSIONS	W440 x D720 x H730
MOTOR	1.1Kw
POWER	Single Phase
SHIP WEIGHT	107 Kg

Planetary Commercial Food Mixers

Classic heavy duty mixers, ideal for bakery and catering.
Reliable and well made for daily use.

ONLY
€749

10 Litre

PFM10

- Beater whisk & dough hook included
- Stainless bowl
- 3 speed control
- Bowl lever
- Integrated stand
- Safety guard
- Long life gear box

TECHNICAL SPECIFICATION

MODEL	PFM10 Planetary Mixer
PRICE	€749
DIMENSIONS	W389 x D480 x H620
CAPACITY	10Lt
MOTOR	450 Watts
POWER	13 Amp plug (1.8m cord)
WEIGHT	75Kg

PFM20

- Beater whisk & dough hook included
- Stainless bowl
- 3 speed control
- Bowl lever
- Integrated stand
- Safety guard
- Long life gear box

TECHNICAL SPECIFICATION

MODEL	PFM20 Planetary Mixer
PRICE	€949
DIMENSIONS	W555 x D558 x H794
CAPACITY	20Lt
MOTOR	1.1Kw
POWER	13 Amp Plug (1.8m cord)
WEIGHT	96Kg

ONLY
€949

20 Litre

Automatic Water Boilers

Heavy duty water boiler, fast and reliable for all day demands.

WB12

ONLY €379

NEW

2 UNITS €359 EA

1 YEAR

- Fast recovery
- Connect to mains water
- Easy to use
- Drip tray inc.
- Draw off 12 Litres

TECHNICAL SPECIFICATION

MODEL	WB12
PRICE	€379
DIMENSIONS	W190 x D420 x H630
POWER	3Kw

marco POURING PERFECTION

ONLY €599

T10

- 10Lt draw off
- 28Lt per hour (156 cups)
- Plumbed direct to mains
- Very compact
- Easy to operate
- Quality stainless
- Drip tray included

TECHNICAL SPECIFICATION

MODEL	T10
PRICE	€599
DIMENSIONS	W210 x D505 x H590
CAPACITY	28 LT p/hour
POWER	2.8Kw
WEIGHT	12.5Kg

Banks

spirit of catering

Heavy Duty Utensil and Pot Washer

Fast and hygienic way to wash Utensils, Pots and Trays.
Powerful twin pump, quick and easy operation time saving warewasher.

OMNIWASH

ONLY
€3799

NEW

4SC

- Big labour saving
- High capacity cleaning
- 85°C Hygiene rinse cycle
- Large 602 x 500 basket
- High door opening 470 mm
- Two 1 HP wash pumps
- Stainless wash arms
- 2 and 4 minutes cycle
- Wash Tank 60 Lt.
- Boiler 9 Lt.
- Cold rinse
- Maximum discharge height for gravity drain = 430mm

Two 1HP Pumps

TECHNICAL SPECIFICATION

MODEL	4SC
PRICE	€3799
DIMENSIONS	W594 x D755 x H1434
POWER	10.5Kw (3 phase)
SHIP WEIGHT	100 Kg

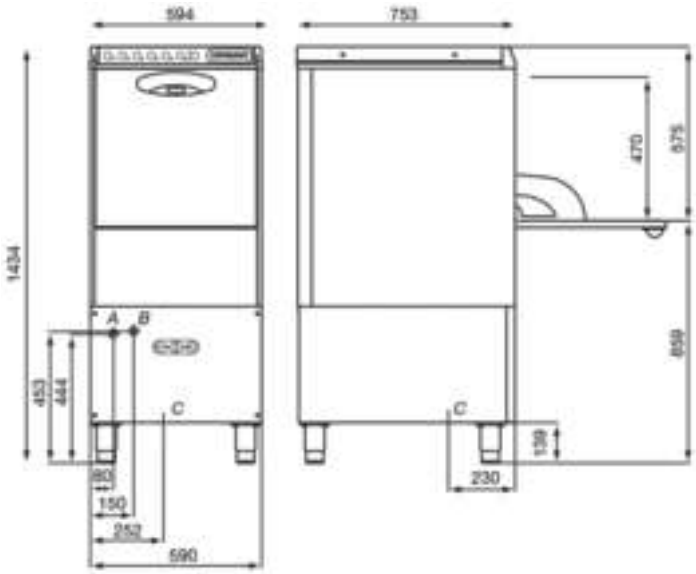

Glasswasher

With over 40 years manufacturing experience, nothing washes like an Omniwash! Sparkling plates and glasses at sparkling prices.

3500ST

MIXED LOAD 18 GLASSES

- 3 minute wash
- Reliable, quality results
- Auto rinse aid
- Stainless steel
- Super value
- One basket supplied
- Gravity drain

Glass size up to 250mm

ONLY €979

Extra Baskets €38 each

TECHNICAL SPECIFICATION

MODEL	3500ST Glasswasher
PRICE	€979
DIMENSIONS	W425 x D555 x H636
CAPACITY	350mm Basket
POWER	2.9Kw (Plug-in)
SHIP WEIGHT	23Kg

4000ST

ONLY €1179

- 3 minute wash
- Reliable, quality results
- Auto rinse aid
- Stainless steel
- Super value
- One basket supplied
- Gravity drain

MIXED LOAD 24 GLASSES

Glass size up to 290mm

Extra Baskets €42 each

TECHNICAL SPECIFICATION

MODEL	4000ST Glasswasher
PRICE	€1179
DIMENSIONS	W475 x D550 x H720
CAPACITY	400mm Basket
POWER	3Kw (Plug-in)
SHIP WEIGHT	35Kg

Glasswashers with Built-in Drain Pump

With over 40 years manufacturing experience nothing washes like an Omniwash! Sparkling plates and glasses at sparkling prices.

EVO4000DDPS

ONLY €1549

- ☑ Large door opening
- ☑ Strong build quality
- ☑ 2,3 or 4 minute cycles
- ☑ Quality wash results
- ☑ Auto rinse aid
- ☑ Auto detergent
- ☑ Auto drain pump
- ☑ 2 Baskets included

TECHNICAL SPECIFICATION

MODEL	EVO4000DDPS Glasswasher
PRICE	€1549
DIMENSIONS	W475 x D505 x H719
CAPACITY	400 x 400mm basket
POWER	3Kw (13 Amp plug)
SHIP WEIGHT	39Kg

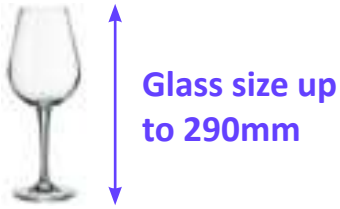

Glass size up to 290mm

Extra Glasswasher Baskets

3500ST	BASKET	W350 x D350	€38
4000ST	BASKET	W400 x D400	€42
EVO4000	BASKET	W400 x D400	€42

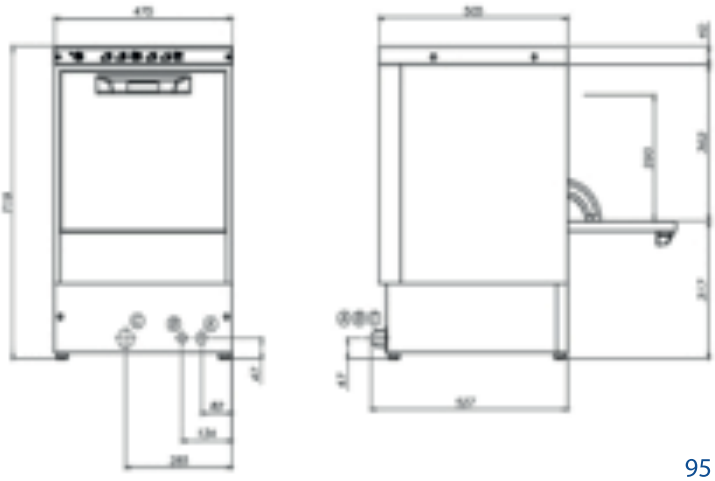

Commercial Dishwasher & Stand

With over 40 years manufacturing experience, nothing washes like an Omniwash! Sparkling plates and glasses at sparkling prices.

5000ST

ONLY €1649

ONLY €1599

- ☑ 3 minute wash
- ☑ Reliable, quality results
- ☑ Auto rinse aid
- ☑ 2 Baskets included

TECHNICAL SPECIFICATION

MODEL	5000ST
PRICE	€1649
DIMENSIONS	W590 x D600 x H820
CAPACITY	500mm x 500mm Basket
POWER	3.65Kw (16.3Amp) (single phase)

Extra Baskets €19 each

ATLAS

ONLY €119

DWS

- ☑ Basket slide under
- ☑ Stainless steel
- ☑ Adjustable feet
- ☑ Heavy duty

TECHNICAL SPECIFICATION

MODEL	DWS Dishwasher Stand
PRICE	€119
DIMENSIONS	W600 x D570 x H450
CAPACITY	500mm x 500mm Basket
SHIP WEIGHT	6.8Kg

Ideal for most dishwashers

Commercial Dishwashers with Drain Pump

Heavy duty front load commercial dishwasher or glasswasher.

OMNIWASH

EVO5000DDPS

ONLY €2079

- ☑ Strong workhorse
- ☑ 2, 3 or 4 minute wash cycle
- ☑ Reliable, quality results
- ☑ Auto rinse aid
- ☑ Auto detergent
- ☑ Auto drain pump
- ☑ 2 Baskets included

WASH TANK FILTERS

TECHNICAL SPECIFICATION

MODEL	EVO5000DDPS Dishwasher
PRICE	€2079
MOTOR	0.75Kw
DIMENSIONS	W590 x D600 x H820
CAPACITY	500mm Basket
POWER	3.7Kw (single phase)

ONLY €119

DWS Stand Optional

Glassware, Cups, Mugs, Bowls and Cutlery

ONLY €19

MODEL	GR50 Plain Rack
SIZE	W500 X D500 X H100

ATLAS

Dishwasher Racks

- ☑ High quality
- ☑ Stackable

Crockery, Glassware and Mugs

ONLY €19

MODEL	PR50 Plate Rack
SIZE	W500 X D500 X H100

Pass Through Commercial Dishwasher

Excellent efficient pass through commercial dishwasher.
Simple to operate and super results.

OMNIWASH

ONLY €3249

61P

- ☑ **High volume dishwasher**
- ☑ **Powerful motor 1 HP**
- ☑ **1.5 or 3 minute wash**
- ☑ **3 phase or 30 amp**
- ☑ **Tables & sink not included**
- ☑ **Gravity drain**
- ☑ **Basket 500 x 500mm x 2**

TECHNICAL SPECIFICATION

MODEL	61P Dishwasher
PRICE	€3249
DIMENSIONS	W640 x D750 x H1904
POWER	6.75Kw (3 phase)
SHIP WEIGHT	119Kg

Glassware, Cups, Mugs, Bowls and Cutlery

ONLY €19

MODEL	GR50 Plain Rack
SIZE	W500 X D500 X H100

ATLAS

Dishwasher Racks

- ☑ **High quality**
- ☑ **Stackable**

Plate, Glassware and Mugs

ONLY €19

MODEL	PR50 Plate Rack
SIZE	W500 X D500 X H100

Heavy Duty Pass-Through Dishwashers

High volume hood type dishwasher can be used as straight through or corner application.

62P/S

ONLY €3699

- ☑ **Extra powerful machine**
- ☑ **High volume dishwasher**
- ☑ **2 powerful wash pumps**
- ☑ **Tables & sink not included**
- ☑ **Auto detergent pump**
- ☑ **Auto rinse aid pump**
- ☑ **3 or 4 minute wash cycle**
- ☑ **Basket 500 x 500mm x 2**

TECHNICAL SPECIFICATION

MODEL	62P/S Dishwasher - Pass through
PRICE	€3699
DIMENSIONS	W640 x D750 x H1904
POWER	7.5Kw (3 phase)
SHIP WEIGHT	124Kg

Two 1HP Pumps

Dishwasher Accessories

MODEL	PRS21
PRICE	€199
DIMENSIONS	W245 x D1100
SHIP WEIGHT	4.5Kg

- Pre-rinse hose
- Hot and cold supply
- Strong spray gun
- Brass metal base

ONLY €199

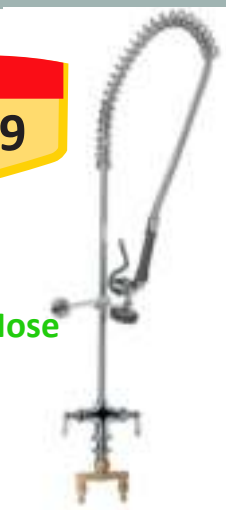

Pre-rinse Shower Hose

SPRAY HEAD
APS003 €63

S/FLEXI HOSE
APS001 €38

GUN HANDLE
APS018 €7

DWS

ONLY €119

- Basket slide
- Stainless steel
- Adjustable feet
- Heavy duty

TECHNICAL SPECIFICATION

MODEL	DWS Dishwasher Stand
PRICE	€119
DIMENSIONS	W600 x D570 x H450
CAPACITY	500mm x 500mm Basket
SHIP WEIGHT	6.8Kg

Glasswasher Basket GR35

ONLY €38

MODEL	GR35
SIZE	W350 X D350 X H100

Crockery, Glassware and Mugs

ONLY €42

MODEL	GR40
SIZE	W400 X D400 X H100

Glassware, Cups, Mugs, Bowls, Cutlery

ONLY €19

MODEL	GR50 Plain Rack
SIZE	W500 X D500 X H100

Dishwasher Racks

- High quality
- Stackable

Crockery, Glassware and Mugs

ONLY €19

MODEL	PR50 Plate Rack
SIZE	W500 X D500 X H100

Chrome Shelf Racking Sets

Storage shelving solutions that are easy and quick to assemble.

- Adjustable shelf heights
- Quick to assemble
- No tools required
- One piece post
- 4 shelves and posts included
- Chrome plated
- Extra shelves available
- Great value

SET A

ONLY €99

SET A INCLUDED

4 x AP1 Posts
4 x A3618 Shelves
16 x PSSC Post Clips

MODEL	SET A
PRICE	€99
DIMENSIONS	W910 x D455 x H1800

SET B

ONLY €119

SET B INCLUDED

4 x AP1 Posts
4 x A4818 Shelves
16 x PSSC Shelf Clips

MODEL	SET B
PRICE	€119
DIMENSIONS	W1220 x D455 x H1800

SET C

ONLY €179

SET C INCLUDED

4 x AP1 Posts
4 x A7218 Shelves
16 x PSSC Shelf Clips

MODEL	SET C
PRICE	€179
DIMENSIONS	W1825 x D455 x H1800

SPARE POST CLIPS

ONLY €6

Pack of 8 pieces

MODEL	PSSC
PRICE	€6

EXTRA POSTS

MODEL	AP1
PRICE	€10

ONLY €10

EXTRA SHELVES

FROM €15

A3618	910 x 455 shelf	€15
A4818	1220 x 455 shelf	€20
A7218	18250 x 455 shelf	€35

Wash Hand Basins & Mop Sinks

Compact stainless steel hand basins and mop sink for safe hygiene.

WHB4

ONLY €89

- Taps included
- Stainless steel
- Wall mounted
- Very popular

MODEL	WHB4
PRICE	€89
DIMENSIONS	W305 x D270

TRADITIONAL WASH HAND BASIN

WHBK

ONLY €199

- Hands free
- Safe to use
- 304 stainless
- With tap and waste

MODEL	WHBK
PRICE	€199
DIMENSIONS	W440 x D330 x H185

KNEE OPERATED SINK

JS1

ONLY €379

- Mounted tap and waste inc.
- Smart hand sink
- Folding grid
- Adjustable feet

MODEL	JS1 Janitorial Sink
PRICE	€379
DIMENSIONS	W510 x D695 x H600
SHIP WEIGHT	51Kg

Commercial Sinks

Every kitchen needs a sink. Ours are high grade stainless steel with left or right hand drainer. Stand, undershelf and taps included.

SBRD1200 & SBLD1200

ONLY €549

- ☑ Large deep bowl
- ☑ All stainless sink unit
- ☑ Single bowl, single drainer
- ☑ Stand, undershelf and taps included
- ☑ 40mm box section legs

MODEL	SBRD1200 & SBLD1200
PRICE	€549
DIMENSIONS	W1200 x D700 x H850
BOWL	W500 x D500 x H300
WASTE & OVERFLOW	48mm x H240 (strainer type)

Taps and waste kit included

DBRD1800 & DBLD1800

ONLY €799

- ☑ All stainless, double bowl sink
- ☑ 2 large deep bowls included
- ☑ Stand, undershelf and taps included
- ☑ 40mm box section legs

Taps and waste kit included

MODEL	DBRD1800 & DBLD1800
PRICE	€799
DIMENSIONS	W1800 x D700 x H850
BOWL	W500 x D500 x H300
WASTE & OVERFLOW	48mm x H290 (strainer type)

Large Bowl
500mm Wide
300mm Deep

Stainless Work Benches

Superior quality stainless 304 grade worktop tables with 430 stainless under shelves for safe food preparation.

CENTRE TABLES

600mm deep

FROM €199

- ☑ Flat stainless tops
- ☑ Ideal for kitchen centre
- ☑ Equipment stands
- ☑ Great value
- ☑ Very well made
- ☑ Very long lasting

TECHNICAL SPECIFICATION

Model	Dimensions	Price
CT9060	W900 x D600 x H850	€199
CT12060	W1200 x D600 x H850	€249
CT18060	W1800 x D600 x H850	€299

WALL TABLES

700mm deep

FROM €219

- ☑ Strong construction
- ☑ All stainless
- ☑ Adjustable feet
- ☑ Flat packed
- ☑ Easy assembly

TECHNICAL SPECIFICATION

Model	Dimensions	Price
WB900	W900 x D700 x H850	€219
WB1200	W1200 x D700 x H850	€259
WB1500	W1500 x D700 x H850	€289
WB1800	W1800 x D700 x H850	€329

WBC1200

TWO DOOR CABINET

ONLY €699

- ☑ Two doors
- ☑ Internal shelf
- ☑ Heavy duty
- ☑ Long lasting
- ☑ Hygiene safe
- ☑ All stainless

TECHNICAL SPECIFICATION

Model	WBC 1200
Price	€699
WB1200	W1200 x D700 x H850/900

Equipment Stands

Optimise your equipment with an ATLAS robust stainless stand.
Top surfaces made with hi-grade 304 stainless steel.

MOBILE EQUIPMENT STANDS

- ☑ **Strong Stainless**
- ☑ **Fits many appliances**
- ☑ **Easy for cleaning**
- ☑ **Flat packed**

FROM €139

TECHNICAL SPECIFICATION

Model	Dimensions	Price
ES610	W610 x D650 x H600	€139
ES910	W910 x D650 x H600	€189

EQUIPMENT STAND

- ☑ **All stainless**
- ☑ **Heavy Duty**
- ☑ **Flat Packed**
- ☑ **Undershelf Included**
- ☑ **Versatile equipment stand**

ONLY €239

TECHNICAL SPECIFICATION

Model	CT9080
Price	€239
Dimensions	W900 x D800 x H850

COMBI + CONVECTION OVEN STAND

- ☑ **Takes bakery trays 600 x 400**
- ☑ **Takes GN trays $GN^{1}/_{1}$ + $GN^{2}/_{1}$**
- ☑ **All stainless construction**

FROM €299

TECHNICAL SPECIFICATION

Model	RS9080
Price	€299
Dimensions	W800 x D900 x H900

Two Tier Gantries & Wall Shelves

Designed for maximum flexible storage. Ambient gantries which can have heat lamps fitted as an option.

WALL SHELVES

- Stainless shelves
- Wall brackets included
- Strong construction
- Easy to clean

FROM €99

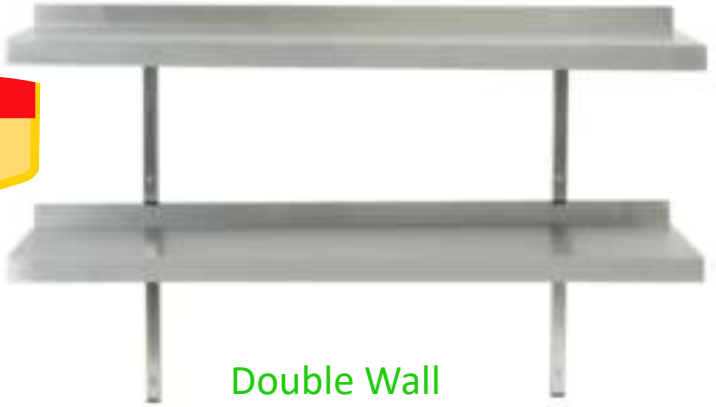

Double Wall Shelf Set

TECHNICAL SPECIFICATION

Model	Dimensions	Price
WS900D	W900 x D300	€99
WS1200D	W1200 x D300	€119
WS1500D	W1500 x D300	€139
WS1800D	W1800 x D300	€159

MICROWAVE OVEN SHELF

ONLY €79

Help keep your kitchen neat and tidy and make use of all available space with this stainless steel commercial microwave oven shelf.

- Suitable for most microwaves
- All stainless shelf
- Fixing screws not included

TECHNICAL SPECIFICATION

Model	MWS
Price	€79
MWS	W560 x D400

DG1200 DG1500 DG1800

ONLY €129

Twin Gantry

- Pass through gantry
- Ambient 2-tier shelves
- Bench or fridge mount
- All stainless
- Strong construction
- Easy to fit

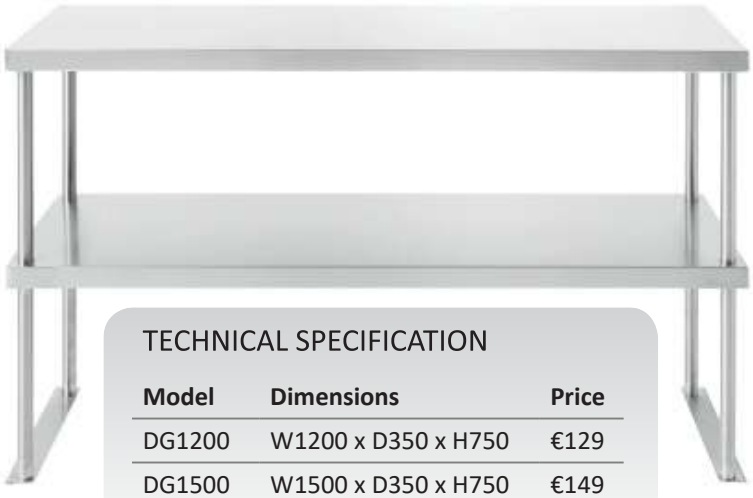

TECHNICAL SPECIFICATION

Model	Dimensions	Price
DG1200	W1200 x D350 x H750	€129
DG1500	W1500 x D350 x H750	€149
DG1800	W1800 x D350 x H750	€169

Kitchen and Dishwasher Hoods

Professional stainless steel exhaust canopies available in various sizes.
Fan and duct not included.

EXTRACTION HOODS

FROM €699

Standard Canopies Including Filters

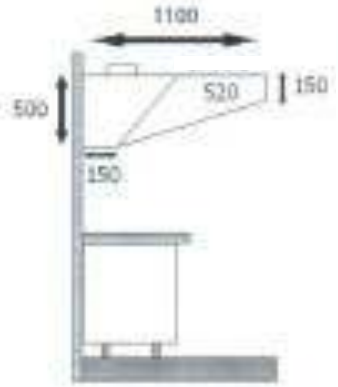

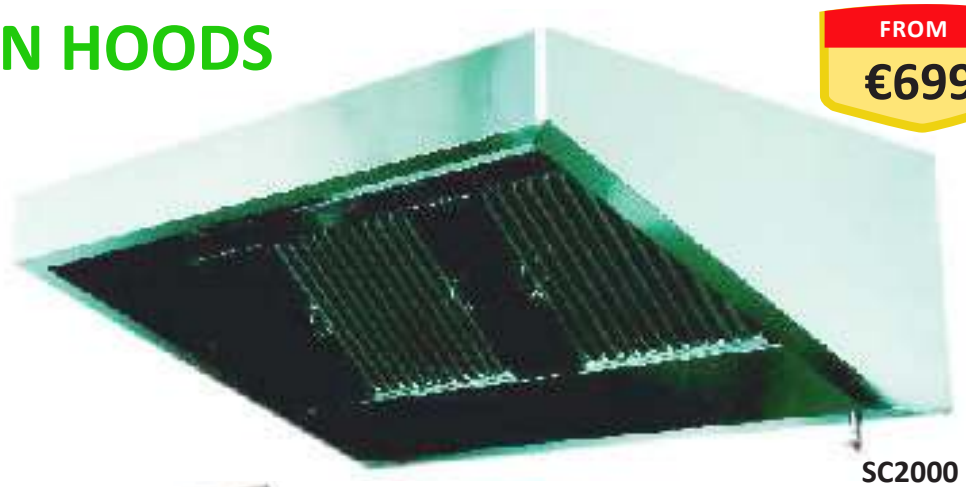

SC2000

- Large fume containment area
- All stainless 201 hi-grade
- Simple to install
- Baffle filters included
- Extra filters €29 each
- W495 x D495 x H40

ONLY €29

Model	Dimensions	Price	
SC1250	W1250 x D1100 x H500	€699	
SC1500	W1500 x D1100 x H500	€769	
SC2000	W2000 x D1100 x H500	€849	
SC3000	W3000 x D1100 x H500	€1439	2 x SC1500
SC4000	W4000 x D1100 x H500	€1639	2 x SC2000
SC6000	W6000 x D1100 x H500	€2399	3 x SC2000

CONDENSE HOOD

FOR DISHWASHERS

ONLY €369

- All stainless construction
- Internal gully
- Neutral evaporation
- Environmentally hygienic

DWCH

MODEL	DWCH Condense hood
PRICE	€369
DIMENSIONS	W1000 x D1100 x H400

Standard Stainless Gastronorm Containers

GN ⅟₁

Model Code	Depth (mm)	Capacity Litre	Width, Depth, Height	Pack Size	Unit price
A11040	40	5.1	530 x 325 x 40	6	€8.00
A11065	65	8.5	530 x 325 x 65	6	€8.60
A11100	100	13.3	530 x 325 x 100	6	€10.50
A11150	150	20.0	530 x 325 x 150	6	€16.00
A11000	Lid	-	530 x 325	6	€7.00

GN ⅟₁

Perforated Container Pans					
AP11065	65	8.5	530 x 325 x 100	6	€10.00
AP11100	100	13.3	530 x 325 x 150	6	€12.00

GN ½

Model Code	Depth (mm)	Capacity	Width, Depth, Height	Pack Size	Unit price
A12100	100	6.0	325 x 265 x 100	6	€7.00
A12150	150	8.9	325 x 265 x 150	6	€10.80
A12000	Lid	-	325 x 265	6	€4.50

GN ⅓

Model Code	Depth (mm)	Capacity	Width, Depth, Height	Pack Size	Unit price
A13100	100	3.7	325 x 176 x 100	6	€6.00
A13150	150	5.5	325 x 176 x 150	6	€9.00
A13000	Lid	-	325 x 176	6	€3.20

GN ¼

Model Code	Depth (mm)	Capacity	Width, Depth, Height	Pack Size	Unit price
A14100	100	2.7	265 x 162 x 100	6	€4.50
A14150	150	4.0	265 x 162 x 150	6	€7.20
A14000	Lid	-	265 x 162	6	€3.00

GN ⅙

Model Code	Depth (mm)	Capacity	Width, Depth, Height	Pack Size	Unit price
A16100	100	2.2	176 x 162 x 100	6	€3.80
A16150	150	3.0	176 x 162 x 150	6	€5.70
A16000	Lid	-	176 x 162	6	€2.00

Accessories

LEVER MIXER TAPS

500ML3	Lever Mix Taps	€85

REFRIGERATION

Upright Fridge Shelves	Turbo Air TABS	€28
Upright Shelf Clips	Turbo Air TADC Set of 4	€4
Upright Door Seals	Turbo Air TADC	€22
Counter Door Seals	Turbo Air TADC	€28
GN 1/1 Shelves	UGN1S	€18
GN 1/1 Runners	UGN1R	€18
GN 2/1 Shelves	UGN2S	€24
GN 2/1 Runners	UGN2R	€18
Unifrost Upright Door Seals		€22
Unifrost Counter Door Seals		€28

REFRIGERATION PARTS

SAMSUNG	SKIAIQ Compressor	€185
SAMSUNG	SD182H-L2N Compressor	€170
DANFOSS	SC18CLX2 Compressor	€395
ZEL	OF135OA Compressor	€130
DIXELL	XR60C Thermostat	€85
BDM	BD01/1 Condensor Fan Motors	€25

QUICK RELEASE GAS HOSES

Gas Hoses

- BS 669-2 Certified
- Restraining cable included
- Heavy duty commercial hose

1/2-GH	1/2"	1000mm long	**€65**
3/4-GH	3/4"	1000mm long	**€75**

CONVECTION OVEN ACCESSORIES

OG6040 Oven Grid 600mm x 400mm	€28
OS6040 Oven Tray 600mm x 400mm	€44

FRYER BASKETS

FB Fryer Basket W165 x D335 x H150	€35

INSECT TRAP

Bartscher

ONLY €149

- ☑ **Hygienic and silent**
- ☑ **2 UVA tubes 15WEA**
- ☑ **Insects stick to removable glue board**

MODEL	300321
PRICE	€149
DIMENSIONS	W620 x D90 x H355
POWER	30 Watt
Weight	3Kgs

WATER FILTER

- ☑ **Scale reduction**
- ☑ **Clean water**
- ☑ **Lower maintenance costs**

CFU10

MODEL	CFU10 Water Filter
PRICE	€239
CAPACITY	6500 Litres

WATER SOFTENERS

CS10

MODEL	CS10 Automatic Water Softener
PRICE	€499
CAPACITY	1100 Litres
SIZE	W275 x D470 x H505

CS20

MODEL	CS20 Automatic Water Softener
PRICE	€799
CAPACITY	3100 Litres
SIZE	W275 x D470 x H735

- ☑ **Automatic regeneration**
- ☑ **Remove hardness in water**
- ☑ **Very reliable**
- ☑ **Ideal for Combi Ovens, Dishwashers, Icemakers etc**

Popular Spares

REFRIGERATION

EBM Model
Condensor Fan

ONLY €24

embraco NEK2150GK
Embraco Compressor
½HP

ONLY €293

R-404A LBP

dixell XB570L Dixell Controller

ONLY €277

ONLY €139

Blast Chiller
Insert Probe

embraco NT2178GK
Compressor
1HP

ONLY €369

R-404A LBP

dixell XR02CX
Dixell Controller

ONLY €69

dixell XR06CX
Dixell Controller

ONLY €89

CATERING EQUIPMENT

Ego Thermostat
50°C - 320°C

ONLY €88

Banks Control Stat
for Gas Fryer

ONLY €122

Banks Convection Oven
Door Seals

ONLY €36

Pizza Stone
660 X 330mm

ONLY €70

Banks Thermocouple
for Gas Fryer

ONLY €29

Banks Door Glass Outer for
Convection Ovens

ONLY €68

Banks Safety Stat
for Gas Fryers

ONLY €153

Banks Safet Stat
for
Convection
Ovens

ONLY €44

WAREWASHING

OMNIWASH PCB St Machine

ONLY €153

OMNIWASH
EP100
Wash Pump

ONLY €384

OMNIWASH DSAM3NTSPL
Rinse Aid Pump

ONLY €75

OMNIWASH 5000ST
Pressure Switch

ONLY €75

OMNIWASH
Evo Machine
PCB

ONLY €244

OMNIWASH CEPS 5
Drain Pump

ONLY €75

OMNIWASH EVO5000
Pressure Switch

ONLY €146

Trading Conditions

LEASING AND FINANCE:

Acceptance is subject to status. We can propose any deal for finance. Full written details available on request.

TAXES:

All prices are exclusive of value added tax.

E & OE:

The contents of this catalogue have been compiled from information received from our producers and while every effort is made to correct mistakes, size and specifications may change without prior notice.

DELIVERY CHARGES:

Free delivery on orders over €200. Packing and delivery for orders under €200, €18 per consignment.

WARRANTY:

All products come with a minimum of one year parts warranty, excluding bulbs, door seals, tubes, breakables, baskets, shelves, pizza stones, electrical elements and glass. RTB, return to base cost borne by owner.

WEEE:

To comply with the legislation which came into effect in January 2007, regarding waste electrical and electronic equipment, we are committed to a safe and healthy environment. When such products reach the end of their lifespan, they must be put into a recycling system by your own waste provider or we can arrange this at a nominal fee to cover expenses.

INSURANCE:

Please remember to include any equipment acquired from us on your insurance. Take care to cover loss of foods, injury and any other perils.

TERMS AND CONDITIONS:

Please ask for a new up-to-date copy of our terms and conditions and we will arrange to have it forwarded to you immediately.

DAMAGES:

We cannot accept any claims for goods signed for in good condition and marked unchecked. However if goods are damaged, please reject then an notify your supplier immediatly.

SITE SURVEYS:

We strongly recommend site surveys if you are purchasing cold rooms, warewashing equipment, large items and any other items you are not sure will fit in or connect to your existing gas, electricity, waste or water supplies.

INSTALLATION OF EQUIPMENT:

It is always recommended to use professional engineers to install your new equipment. New gas laws came into force in January 2009.

PAYMENTS:

For information on payments i.e. credit cards, bank transfers, 30 day accounts, cheques and leasing options, please contact us. Note: It can take up to 7 days for some cheques to clear.

RESTOCKING:

25% restocking charge on unpacked products. 50% restocking charge applicable on products without packaging. Customer to pay transport costs back to our warehouse. No returns accepted after 30 days. Notice must be given in writing.